HILLSIDE ELEMENTARY SCHOOL

TOWN OF NEEDHAM
NEEDHAM, MASSACHUSETTS

DESIGN DEVELOPMENT MSBA COMMENTS

MARCH 6, 2017

DORE & WHITTIER
ARCHITECTS, INC.

260 Merrimac St. Bldg 7, 2nd Flr •Newburyport•Massachusetts
Phone: 978-499-2999 • Fax: 978-499-2944
212 Battery Street • Burlington • Vermont
Phone: 802.863.1428 • Fax: 802.863.6955
www.doreandwhittier.com

Response to MSBA Comments Regarding Design Development Submission for Hillside Elementary School

Dated February 16, 2017

TABLE OF CONTENTS

Design Development Report Review Comments

1. Summary Comments
2. Incorporate Cx Recommendations
3. Designer Deliverables
4. Drawing requirements
5. Project Manual requirements
6. Additional Findings / Comments

Appendices

Appendix - 1 List of Proprietary Items & Certified Meeting Minutes

Appendix – 2 Updated Project Schedule

Appendix - 3 Updated Commissioning Consultant's Recommendations

Appendix – 4 Light Fixture Cut Sheets

Appendix – 5 Landscape Bench Cut Sheets

Appendix – 6 Lighting Calculations

THIS PAGE INTENTIONALLY LEFT BLANK

Design Development Submission Review Comments (response)

MSBA REVIEW COMMENTS:

MSBA REVIEW COMMENTS:

The following comments[1] on the Design Development submittal are issued pursuant to a review of the project submittal document dated *February 2, 2017,* for *new construction of Hillside Elementary School,* and presented as a Design Development submission, as produced by *Dore & Whittier Architects and* its consultants. Certain supplemental components from the Owner's Project Manager (OPM) – *Town of Needham,* are included. Documents received at MSBA on February 2, 2017.

- *The project is a new K-5 elementary school for the Town of Needham.*
- *The reconciled cost estimate indicates the Total Construction Budget is $45,465,414, and the updated budget indicates the Total Project Budget is $65,907,414. The budget conforms to the PFA.*

[1] The written comments provided by the MSBA are solely for purposes of determining whether the proposed plans and specifications, and any other design documents submitted for MSBA review, appear consistent with the MSBA's guidelines and requirements and are not for the purpose of determining whether the proposed plans and specifications meet any other legal requirements imposed by federal, state or local law, including, but not limited to, zoning ordinances and by-laws, environmental regulations, building codes, sanitary codes, safety codes and public procurement laws or for the purpose of determining whether the proposed plans and specifications and any other design documents submitted for MSBA review meet any applicable professional standard of care or any other standard of care. Project designers are obligated to implement detailed technical review procedures to effect coordination of design criteria, buildability, and technical adequacy of construction documents. Each city, town and regional school district shall be solely responsible for ensuring that its plans and specifications comply with all applicable provisions of federal, state, and local law, including, but not limited to, all procurement laws. The MSBA recommends that each city, town and regional school district have its legal counsel review its plans and specifications to ensure that it is in compliance with all provisions of federal, state and local law prior to bidding. The MSBA shall not be responsible for any legal fees or costs of any kind that may be incurred by a city, town or regional school district in relation to MSBA requirements or the preparation and review of the project's plans and specifications.

1) **Summary Comments:**

- List of proprietary items (if any), associated District affidavit, and certified copy of vote.
  - *Included: The OPM's letter indicates a list was approved at the Permanent Public Building Committee meeting on January 9, 2017, and a Certified Vote will be issued at the next regular meeting. Provide a copy of this Certified Vote along with an updated list of proprietary items with the responses to this review.*

Response:

A Certified copy of the PPBC Meeting Minutes from January 9, 2017 noting the vote for the proprietary items is included is attached (Appendix 1) with the list of proprietary items.

2) **OPM deliverables:** *Unless specifically stated otherwise, the OPM deliverables are included in the submission with no response from MSBA required.*

- Develop project scope, schedule of budget:
  - Prepare independent construction cost estimates.
  - Update project budget.
  - Update project schedule *An updated project schedule is included. However, the graphic portion (bars) are cut off. The schedule appears to be a Gantt (Bar) Chart, but it only includes the first columns and a few of the bars. Since the software used likely added bars for all the line items, a full schedule with all the bars should be relatively easy to produce, which is graphically easier to understand. While all the pertinent information is provided, consider providing the full chart (printed on 11x17 if possible) for clarity. This should be provided as part of the response to this review.*

Response:

The DD project schedule is attached (Appendix 2) showing the Gantt (Bar) Chart from DD through project completion in 11x17horizontal format on three pages as requested.

- Coordinate design; make recommendations to the Owner
  - Technical accuracy
  - Efficiency
  - Coordination
  - Constructability
  - Cost effectiveness

- Review designer submissions; make recommendations to Owner
  - Approve submission.

- Coordinate the commissioning consultants' review
  - Incorporate Cx recommendations*: A copy of the Commissioning Consultant's review is included in the submission. However, it does not appear as if all items have been addressed. These should be addressed as part of the response to this review.*

    Response:

    An updated copy of the Commissioning Consultants review is attached (Appendix 3) with the Designers response to all of these comments.

3) Designer deliverables: *Unless specifically stated otherwise, the designer deliverables are included in the submission with no response from MSBA required.*

- Target dates for all filings and permits
  - Confirmation of project registration with CHPS / USGBC
  - Security and visual access requirements;
    - Confirmation that the persons responsible for implementation of the District's emergency procedures, and responding emergency medical, fire protection, and police agency representatives have been consulted in the planning process and any associated requirements have been included in the project.
    - Identification of any other security related items particular to the District and/or the proposed project.
    - Verification that the following safety and security related issues have been reviewed and are in accordance with the District's procedures as noted above:
      - Main entrance design – describes District protocol for visitor entry and check-in related to the current design for visitors to remain in the vestibule versus a side sub-vestibule.
      - Classroom lockset hardware - confirm hardware functions are compatible with the District's protocols related to lockdown.
      - Classroom / Instructional spaces visibility - confirm that the inclusion of sidelights at entrance locations is compatible with the District's current standards related to visibility from corridors and whether any related vision control option measures are to be incorporated.

- Alternative entry locations - confirm project includes site and building signage, as may be required by District's emergency procedures, to identify locations where first responders may more directly reach a person needing medical attention; Knox Boxes; and provisions for building plans to be delivered to local fire and response agencies.

- Submit updated environmental permitting assessment, building code analysis, ADA/MAAB analysis, zoning, and list of all required testing and permits. Provide a certification that all applicable local, state and utility officials have been contacted by the designer regarding each basic design, and utility connection. *The submission includes this information. However, confirmation that all officials were contacted was not certified. Provide this certification with the responses to these comments.*

  Response:

  The Design Team certifies that the applicable local, state, and utility officials have been contacted and are aware of the project. The Design Team continues to coordinate with the utility companies regarding the coordination of utility connections, permitting, and timing to assure both temporary and permanent services are available to the site. Final coordination will be the responsibility of the Contractor who is yet to be determined.

- Design Development drawings and specifications for all disciplines.

- Quality Control documents demonstrating:
  - Ceiling clearances
  - Mechanical room and shaft sizes
  - Coordinate specifications and drawings
  - Filed sub-bid work
  - Scheduling.
  - Equipment and power.
  - Existing and new construction.
  - Phasing *A specific statement regarding this item is not included in the project documents binder. In 011113, the Invitation to Bid, 1.10 it refers to the project consisting of both building demolition and new construction. However, in article 1.05.A.2 it states "a previous site demolition project has been completed…". The hazardous material assessment and an Asbestos Abatement specification section is included. The references should be coordinated and consider including a statement, in one or more locations,*

that provides bidders with clarity on the demolition requirements.). If no demolition is in this contract, consider omitting the abatement section.

Response:

A previous demolition project has been completed. However, that previous demolition project did not demolish all structures on the site. Two houses remain on the project site, noted as buildings "U" and "V" on sheet AD1.01 included with the DD submission. These houses will require abatement and demolition as part of the next construction phase. Additional clarification in both the drawings and specifications will be included in the next submission.

- Life Cycle cost analysis for energy and water consuming devices.

- Construction cost estimates in Uniformat II, level 3
  - Showing unit rates and quantities; projected to midpoint of construction *Included. However, the estimate is escalated to the start of construction instead of the mid-point. Provide an updated cost estimate escalated to the mid-point of construction, or clarify where the additional escalation is carried with the responses to these review comments.*

Response:

Escalation to the mid-point of construction is included in the cost estimate within the rates. Escalation on the summary is to the start of the construction. This is consistent with all MSBA projects estimated by PM&C and will require no change to the cost estimates provided in the DD documents.

- Updated space summary and signed certification that reflects the current design. *Included. Based on the space summary provided, the MSBA notes the following:*

Spaces	PFA Space Summary	DD Space Summary	60% CD Space Summary	90% CD Space Summary	Difference to PFA	Comments
Core Academic Spaces	30,750	30,750			-	No changes have been made since the PFA Agreement.
Special Education	6,594	6,594			-	No changes have been made since the PFA Agreement.

Art and Music	2,546	2,585			39	This category has increased by 39 nsf since the PFA Agreement
Health and Physical Education	6,300	6,314			14	This category has increased by 14 nsf since the PFA Agreement
Media Center	2,605	2,605			-	No changes have been made since the PFA Agreement.
Dining and Food Service	6,790	6,825			35	This category has increased by 35 nsf since the PFA Agreement
Medical	510	510			-	No changes have been made since the PFA Agreement.
Administration and Guidance	2,320	2,320			-	No changes have been made since the PFA Agreement.
Custodial and Maintenance	2,029	2,029			-	No changes have been made since the PFA Agreement.
Other	-	-			-	No changes have been made since the PFA Agreement.
Total Building Net	**60,444**	**60,532**			88	This category has increased by 88 nsf since the PFA Agreement
Total Gross	**90,702**	**90,702**			-	No changes have been made since the PFA Agreement.
Grossing Factor	**1.50**	**1.50**			-	No changes have been made since the PFA Agreement.

- Written summary comparing the project design with the final design program

  - Explanation of deviations within the space summary from the Project Funding Agreement
    - *MSBA accepts this variation to the approved project with no further action required except as noted below.*
    - *Regarding DESE approved SPED spaces, although the space summary square footage is consistent with the PFA, space locations have changed. The design team must indicate how the project schedule can accommodate a*

resubmittal and approval by DESE, or confirm how the spaces will be returned to the approved size, configuration and location (provide in the response comments to this review)

Response:

Dore & Whittier will prepare a revised submission to DESE highlighting the revised locations for the Speech/Language Office. Preparation of that submission is already in progress. Our intent is to make that submission for DESE review mid-March 2017 while our 60% Construction Documentation is underway. Regardless of the timing or nature of the DESE response, D&W is confident that there will be no impact to the schedule given the extremely limited nature of the space relocation.

4) Drawing Requirements

- Site and utility drawings
  - Existing and proposed contours and locations of the proposed building or addition(s). Show entry level elevation and key exterior grades at perimeter. Indicate all retaining walls. Include benchmarks of site if survey is available.
  - All utilities existing and proposed, indicating location, elevation, composition and size e.g., gas and electric utility providers.
  - Roads, laid out parking areas, walks, recreation areas, terraces and other site improvements.
  - Building locations fixed and referenced from main survey baseline, if available. *It does not appear the building location is established relative to a baseline or property line. This should be included in the next submission.*

    Response:

    The building coordinates at the South East corner as well as the heading for the wall location are indicated on Sheet C2.00. This building layout information will continue to be provided for future submissions.

  - Plant materials with preliminary schedule.

  - Cuts of benches, light standards. *Cuts of benches and light standards are not included in the submission. Provide these items with the next submission.*

Response:

Light fixture and bench cut sheets are attached (Appendix 4 and 5 consecutively) with this response.

- Building drawings and other graphic and written requirements with floor plans showing: (minimum 1/8" = 1'0")
  - Building perimeter with exterior wall thicknesses and overall dimensions;
  - Structural grid
  - Plan requirements of mechanical and electrical systems,
  - Building core; elevators, stairs, shafts, public toilets, with dimensions; *These elements are clearly shown, and appear to be of appropriate size, but are not dimensioned. This should be included in the next submission.*

Response:

Additional dimensions and development will be included in the next submission.

  - Internal partitions; appropriate thicknesses and dimensions to fix basic organizations; indicate fire rated lines.
  - Door swings.
  - Floor elevations.
  - Built-in furniture and equipment.
  - Furniture layout concept drawings. *Included. Identified as partial equipment plans. Complete and include in the next submission.*

Response:

Further development will be reflected in the next submission.

- Large scale plans showing key areas e.g. lobby, special spaces. Indicate surface materials. (minimum scale 1/4" = 1'0").
- Roof plans showing;
  - Proposed systems type; *The general notes on the roof plans indicate that all roof areas are type R1 unless otherwise noted. While there are some details for the other roof systems, it is not clear on the roof plan where these occur. One difference appears to be when the assembly is installed over a concrete deck versus a metal deck. Additional indicators of roof type should be included on the roof plan for the next submission.*

Response:

Clarification of roof systems and locations will be provided for the next submission. Note that in some locations, specific roof systems may only be noted in details (e.g. roofing systems over concrete pads directly adjacent to roof top equipment).

  - Pitch and drainage pattern.
  - Roof drain, gutters and scuppers.
  - Skylights, stair halls through roof, penthouses, major equipment, chimneys.

- Building sections: One transverse and one longitudinal section. Indicate floor to ceiling heights and floor-to-floor heights. Label all spaces.

- Building elevations showing;
  - Full height elevations including roof structures, e.g., mechanical equipment, chimneys, and penthouses.
  - Floor elevations, floor-to-floor height, and overall height related to benchmarks on site plans.
  - All fenestration.
  - Column centerlines.
  - Materials indicating major control and expansion joints, and divisions of materials where required.
  - Louver locations.
  - Exterior grades and topographical features in context.

- Full height wall sections for main elevations and at special conditions. Show foundation and perimeter treatment, wall construction including insulation and supporting structure, fenestration and mechanical penetrations, and floor construction. *Included. The overall configuration of wall sections are shown. The details at fenestrations, and especially the roof edges, are not complete. Even though there are enlarged details for some conditions, it does not appear the method and configuration to enclose the metal panels to the roof has been determined or documented (e.g. details A 6.60). There is also not a clear illustration of the structural support of these large overhangs on either the architectural or structural drawings. It is anticipated these will be further developed for the next submission. Please confirm.*

Response:

The enclosure as well as the structural support for these locations is in development; additional information will be provided as part of the next submission.

- Interior elevations: Show at all spaces, e.g. library, lobby, and all typical spaces, e.g. classroom.
- Reflected ceiling plans: Show prototypical structural, fire protection, mechanical and electrical information for classrooms and major spaces, including lighting layouts with ceiling height and material changes.
- Schedules;
  - Finish schedule by room types.
  - Door schedule by room types.
  - Window schedule.
  - Equipment schedules, e.g., food service, instructional media. *A kitchen plan and schedule of equipment is provided. The technology plan includes the overall layout but it does not appear the major head-in equipment is identified on the drawings. Most of the equipment (but not quantities) appear to be included in the specification. This should be addressed in the next submission.*

Response:

Additional clarification regarding instructional media will be reflected on the equipment plans for the next submission.

- An interior color theory statement discussing proposed paint and material selections and colors for typical and special spaces and why they have been selected and, how these selections relate to exterior materials and colors.
- Structural Concepts;
  - Locations and dates of test boring holes and results of soil investigation, including water levels, allowable solid bearing pressure and bottom grades of footing and slabs.
  - Framing plans: typical floor framing, roof framing, special framing, show framing at major openings and sizes of members.
  - Foundation plan showing sizes and locations of typical components.
  - Column locations.
  - Preliminary details including floor and roof deck, statements as to methods of lateral bracing and how requirements of earthquake code will be met.
  - Details for special and/or incidental structural features, e.g. tunnels, connecting bridges and unique architectural features. *The structural framing of many of the*

large overhangs are not shown (roof framing plan indicates detail 8/S3.01 but that detail is not provided). The approach is also not shown on the related architectural details. This should be included in the next submission.

Response:

Continued development will be reflected in the next submission. Note that narrative descriptions of roof edge structural conditions were provided to the cost estimators in order to account for additional detailing in the DD cost estimates.

- Connection to existing buildings at foundation and at key points at existing structure if applicable. *Not applicable.*

- Fire protection: floor plans indicating wet or dry type systems, hose racks or cabinets and fire department tie-ins. Indicate whether a fire pump will be required and, if so, show location within the building. Show typical sprinkler head layout;

- Plumbing and sanitary systems: floor plans indicating locations of all plumbing fixtures and special features, and approximate location and size of all piping systems and principal items of equipment. *The gas service to the generator does not appear to be shown on either the plumbing drawings or civil utility plan. This should be included in the next submission.*

Response:

The gas service for the generator is most clearly shown on Sheet P1.20 as a 6" line extending around the custodial area and cafeteria. This line will be buried. Additional notation will be provided for the next submission.

- Heating, Ventilating and Air Conditioning Systems;
  - Heat gain and loss calculations.
  - Show locations and approximate sizes of piping systems, air handling systems and principal items of equipment such as compressors or cooling towers.
  - Indicate space requirements of major equipment and their location in mechanical rooms and fan rooms. Indicate shaft requirements.

- Electrical Systems;

  Calculations showing total electrical load. *Included in the project binder. The calculations are included in a 4-page (2 sheets, front and back) report. This seems brief, please confirm as part of the response to these review comments that all information is included.*

Response:

At this time, the load letter calculations are what have been developed for the project based on square foot calculations. More detailed load calculations will become available as the building circuitry is developed through CDs.

- All services including those for special purposes shall be located and indicated.
- Lighting shall be indicated as to type, location and intensities in foot-candles for each special and typical space. Provide fixture cuts of typical lighting fixtures, e.g., classrooms. Provide fixture cuts for special lighting applications. *Light intensities are not indicated on the drawings. Fixture cuts are not included (although specific fixtures are listed in a schedule) and should be provided with the responses to these comments.*

Response:

Lighting calculations for some typical educational spaces and the site are included with these responses. Additional lighting calculations for the remainder of educational and public spaces will be developed as the lighting plans progress into CD phases. Building lighting fixture cuts are included (Appendix 6) with these responses.

- Switchgear and emergency generator.
- Fire alarm system drawings showing all initiation and signaling devices, control panels, annunciator panels, etc.
- Security system drawings.
- Communications drawings showing chases, major equipment locations and any special distribution requirements.

5) Project Manual Requirements:

- Outline Specifications in CSI Master spec Divisions Including: *A full 3-part CSI specification is provided instead of an outline specification. This provides more information and is acceptable. However, it does not as readily convey the nature of systems, (such as foundations, exterior wall assembly) as an outline specification. However, the combination of drawings and specifications provides the information.*
  - Site work; clearing, drives, walks, parking areas, fences, excavation, backfill, planting.
  - Footings; on earth, rock, piles, caissons, proposed bearing pressures, boring logs.
  - Foundation walls; type of concrete, reinforcing, type and extent of waterproofing.
  - Footing drains; type, disposal of drainage.

- Exterior walls: superstructure, type, materials, brick type, alternate cladding, back-up materials, damp proofing material and extent, special features.
- Roofs; type, vapor barrier, insulation, flashings, all materials.
- Flashings; general types, all materials, weights, where each type is to be used.
- Sheet metal; gutters, leaders, others uses, except flashing.
- Windows; general types, materials, section weights, sub-frames, finish, glazing, screens.
- Doors, exterior and interior; types and thicknesses. *Included. The specification indicates the type of veneer for interior wood doors as shown on the drawings but this does not appear to be indicated in manual. This should be addressed in the next submission.*

Response:

The door veneer species and cut is specified in 08 14 16-2.04. The paragraph 2.02-B-3 is related to field finished doors and will be removed prior to the next submission.

- Steps, exterior; including platforms and landings' materials.
- Stairs, interior; including platforms, landings, walls, materials and finishes.
- Framing; wood, concrete or metal systems in accordance with general design.
- Partitions; materials, thicknesses, finishes.
- Cabinet and casework; types and materials.
- Food Service Equipment; types and materials.
- Furring; lathing, plastering, materials and locations.
- Insulation thermal; types, thicknesses, methods of application and locations.
- Acoustical treatments; types, thicknesses, methods of application and locations.
- Interior finishes; materials for floors, walls, bases, wainscots, trim, ceilings, ceiling heights.
- Fire protection; standpipe systems, sprinkler systems, fire pumps and accessories.
- Water supply; source; location of main to which connection will be made; type of pipe for service main; load requirements; load factors and pressures.
- Sanitary sewers; sewage disposal system, pipe and other materials.
- Storm sewers; storm drainage disposal system (institution or local facility), pipe and other materials.
- Gas main; material, size, location. Interface with utility company. *It is indicated on the drawings that the size of the gas main will be provided by the utility company, through the plumbing contractor. The gas main does not appear to be included in the specification. This should be updated and further documented in the next submission.*

Response:

The gas main will be installed up to and including the gas meter by the Utility Company. The Plumbing Contractor will be responsible for all piping after the gas meter. The site contractor will be responsible for excavation, bedding, and backfill of the gas main following installation by the Utility Company. The sentence in Section 22 00 10-1.17-C is intended to convey coordination of the main for installation by the Utility Company and will be clarified for the next submission.

- Plumbing; systems such as wastes, vents, hot water, cold water, gas, air, oxygen, vacuum, main source of supply, materials for each, water heaters, pumps, thermal insulation fixture quality, all special features.
- Heating, ventilating and air conditioning; type of heating and refrigeration plants, type and capacity of boilers and cooling equipment, fuel, type of burners, fuel storage, heaters, feed water pumps and heaters, thermal insulation, type of heating medium, supply and return piping, radiation, unit heaters, radiant heating, principal air conditioning equipment types, special features, supply, return and exhaust ductwork. *Included. It is stated in 230010 HVAC, article 1.01 that the HVAC contractor is responsible for removing and disposing hazardous material associated with new and existing HVAC equipment. It appears the intent is for this to apply only to any internal materials such as refrigerant. Typically, any asbestos insulation or other material would be removed by the Abatement section. If that is the intent, consider adjusting the language in the HVAC article. (It is noted 022820 Asbestos Abatement does not include any HVAC items in the scope of work. However, pipe insulation is one of the Unit Prices in 022820. It is not clear/stated whether that would be plumbing or HVAC piping or potentially both). Review the references and update the language if determined appropriate.*

Response:

There will not be any removal of hazardous materials by the HVAC contractor. All hazardous materials will be by the Abatement Contractor. Section 23 00 10 will be revised for the next submission.

- Electric work; service connection, location, institution or public utility, overhead or underground, transformers including type and location, types of conduit and wiring, types of fixtures, location of main switchboard, radio, fire alarm, telephone, public address, emergency lighting and wiring, emergency or other generators, special features, including Master TV, information retrieval and/or data processing system.

- Elevators, dumbwaiters and platform lifts; capacities, speed, travel in feet, landings, operation, controls, platform sizes, machine type and location, car and entrance finishes, signals.
- Other built-in equipment, types and materials.

6) Additional Findings / Comments:

- *Copies of several meeting minutes from the Town of Needham's Permanent Public Building Committee meetings are included in the Project Binder. It is unclear if there is something in particular the District wants to highlight to MSBA. Please clarify in your responses to these review comments.*

Response:

The OPM included these in the DD binder to demonstrate the ongoing PPBC involvement and oversight of the design and approval process. These will not be included in future submission, except for required evidence of certified votes as needed, because they are not required by the MSBA.

End

Appendix 01

NEEDHAM HILLSIDE SCHOOL AT CENTRAL AVENUE- PROPRIETARY SPECIFICATION ITEMS

The Town of Needham, the Awarding Authority for the Hillside School at Central Avenue construction project, has undertaken a reasonable investigation of the following products, and determined, in accordance with MGL Chapter 30 Section 39M(b), that for reasons of product performance, reliability, maintenance issues, and/or anticipated life cycle cost savings, that designation of the following products as "proprietary" for bidding purposes is in the public interest for the reasons stated.

Section 03 05 10 – Concrete Moisture Vapor Reduction Admixture:

Product: Barrier-One Concrete Admixture and MVRA 900 Concrete Admixture.

- As a concrete admixture, the installed cost is significantly lower (20%) than moisture mitigation concrete topping compounds that are applied once the concrete has hardened.
- Inclusion of this admixture dramatically shortens the concrete curing time and allows installation of finished flooring materials in a fraction of the time than if "traditional" concrete curing is used, potentially allowing the contractors to significantly expedite the project schedule.
- As compared to other similar admixture products, a water vapor reduction admixture provides a superior performance warranty, including a "life of the concrete" guarantee against moisture related flooring failures. The terms of this warranty include all labor and materials costs to remove failed product, treat the slab, and reinstall replacement products. This, combined with the "life of the concrete" duration is far superior to any other competitive product, and is not offered by any flooring manufacturer.
- These admixtures also provide a guarantee that flooring materials including flooring adhesives, primers, and cementitious underlayments, will properly adhere to the dosed concrete. The terms of this warranty state that Barrier One will "either provide for the mechanical abrasion of the affected area or provide for the application of a feather finish cementitious underlayment or a bond enhancing product normally used in the industry for such purposes." This remedial work would be at no cost to the project, flooring installation company, or General Contractor. The adhesion guarantee further states that upon completion and acceptance of the bond test, the admixture manufacturer would match the flooring material's warranty for the affected areas, should any of the above listed materials fail to remain adequately adhered to the substrate during that material's normal warranty period.

The proprietary products to be specified are either Barrier One concrete water vapor reduction admixture by Barrier One or MVRA 900 moisture vapor reduction admixture by ISE LOGIK.

Section 04 20 00 – Masonry; Product: Pittsburgh Corning - Foamglas Cellular Insulation Guide

- Thermal bridging, or cold bridging, is a condition where a thermally conductive exterior material (such as metal or masonry) passes through the thermal insulation layer in a building, effectively "bridging" the thermal envelope and permitting heat to be transmitted directly to the outdoors. Not only does this condition represent a significant energy loss for the building, it can also introduce other indoor environmental or water management problems by potentially permitting condensation to form on the warm side of the bridging element during winter. To mitigate this bridging problem, we make every effort to thermally break exterior wall assemblies from the interior with some sort of insulating material.
- At locations where masonry veneer bears on building steel, a thermal bridge is often created where there is direct contact between the exterior masonry and the building structural steel. Bearing this masonry on another product represents a design challenge as whatever is supporting the masonry must be capable of carrying a much higher load than typical foam plastic insulation.

- Cellular glass insulation is a product that has a very high compressive strength, allowing it to support masonry veneer products, and still provides a thermal break at bearing locations so that the thermal envelope can be maintained at roof to wall transitions. Other products such as super high density foam plastics are not competitive in the same price range as Foamglas.
- Pittsburgh Corning is the only manufacturer of cellular glass insulation products designed for building envelope use in the United States. The proprietary product specified will be Foamglas, manufactured by Pittsburgh Corning USA.

Section 07 21 00 – Thermal Insulation; Product: Mineral Wool Insulation Rainscreen Wall Assemblies.

- NFPA285 is a test of exterior wall finish systems that include rigid "plastic" insulation for combustibility and fire spread between floors. As applied in the industry, all materials of the exterior wall system (including the air and vapor barrier, insulation, and exterior finish) must be tested together as one assembly. The availability of exterior wall finish products proposed for this project that have been successfully passed NFPA285 testing is significantly limited at this time. Having the exact wall system designed for the project tested as an assembly would involve significant cost, and would negatively impact the schedule as the testing is not under our control, and may take several weeks or months to be scheduled. Per the application of NFPA, the materials used in the test (exterior finish and sub-framing support system, insulation, air and vapor barrier) and details of the wall assembly could also become proprietary for the project, so that the tested assembly is not altered in any way. Using mineral wool insulation in the wall assembly in lieu of rigid plastic insulation would not require the exterior wall assembly to meet NFPA285 testing.
- Two manufacturers of mineral wool insulation produce products that are intended for use in rain screen or similar vented wall assembly construction. Because there are only two manufacturers, the listing of these products is considered proprietary under Massachusetts public procurement guidelines.
- The proprietary products specified are Roxul Cavityrock DD mineral wool insulation and Thermafiber RainBarrier HD.

Section 07 21 00 – Thermal insulation; Product: Extruded Polystyrene Rigid Insulation Board used in exterior walls.

AND

Section 07 25 00 – Weather Barriers; Product: Wall Vapor Retarder / Air Infiltration Barrier (VR/AIB) used in exterior walls.

- NFPA285 is a test of exterior wall finish systems that include rigid "plastic" insulation for combustibility and fire spread between floors. As applied in the industry, all materials of the exterior wall system (including the air and vapor barrier, insulation, and exterior finish) must be tested together as one assembly. As applied in the industry, NPFA285 testing is interpreted to be proprietary to the exact manufacturers and products listed, unless a fire engineer provides an opinion that different materials will behave in a similar manner to those tested. No substitutions to any of the products in the successfully tested system are allowed, and no alterations of detail conditions at wall openings are possible without invalidating the successful test.
- Having the exact wall system designed for the project tested as an assembly would involve significant cost, and would negatively impact the schedule as the testing is not under our control, and may take several weeks or months to be scheduled.
- Opinions from a fire engineer that materials proposed for the project could be obtained, however those commonly involve a cost to the project. Since products of the exterior wall system are provided by three different Filed Sub-Bid or Trade Contract categories, those bidders have no way of knowing who they will be

working with and what products are being provided, and will not include any costs associated with obtaining an engineering opinion.

- Wall systems successfully tested to NFPA 285 include prescriptive details for openings; i.e. the details in the documents must match and include the same components in the same configuration as the tested wall assembly. Changing products in the wall assembly may invoke details for window heads and sills (among others) that are significantly different than those in the documents. Such changes in details cannot be determined until the completion of bidding and products are selected by the subcontractors, and could result in significant additional cost to the project.
- The Extruded Polystyrene Association has undertaken several NFPA285 tests, which are applicable to the insulation products of the association members, which include Dow, Pactiv, and Owens Corning. Using an NFPA285 test applicable to multiple manufacturers will provide for competitive bidding and the assurance that the products used, and the details in the documents are compatible as part of a successfully tested wall assembly. While three manufacturers are available, ONLY the products of these manufacturers that have been tested under the XPSA test are allowable, and no substitutions can be entertained.
- The weather barrier in the wall (VR/AIB in the project terminology) must be a part of the tested assembly, as stated previously. The products used must be those approved for use based on the test of the XPSA insulation products. Based on these products, there is only one only vapor impermeable air barrier product approved for use.
- The proprietary air and vapor barrier product specified is Barritech NP fluid applied air and vapor barrier by Carlisle Coatings and Waterproofing.

Section 07 43 10 – Exterior Wood Composite Panels; Product: Parklex FS or Prodema Prodex

- The exterior rain screen cladding material is a wood veneered product consisting of a composite back-up panel. The cladding product satisfies the design intent of a natural wood veneer finish with the durability of a highly stable substrate and finish.
- Two products, Parklex FS and Prodema Prodex, offer comparable finish and warranty terms and are considered essentially equal as defined by Massachusetts public procurement regulations. A third equal is not identified, making the product proprietary under these same regulations.
- The proprietary Wood Composite Panels products are Parklex FS (Basis of Design) and Prodema Prodex (equal).

Section 08 80 00 – Glazing: Product: School Guard SGG4VB

- Specific areas of exterior glazing on the project are identified to incorporate security glazing in accordance with the direction provided by the Chief of Police.
- School Guard glazing is a proprietary system of glazing lamination and installation into the door or frame unit that prevents not only holds the broken glazing together, but also keeps the glazing securely fastened into the frame to prevent the entire glazing unit from simply being pushed out in the event of an attempted intrusion.
- The specified security glazing will be School Guard SGG4VB.

Section 08 80 00 – Glazing: Product: Solera or Okalux Plus

- Significant portions of the exterior glazing system utilize light diffusing glazing. This engineered glazing product is designed to diffuse light within a space and offer greater levels of natural daylighting further from the exterior walls while reducing glare within the space.
- Give the east-west orientation of the classrooms, many of the classrooms face challenges regarding low sun angle glare. A light diffusing glazing product will help to mitigate the glare issues, but rather than eliminating or blocking the natural light, it will diffuse the light within the educational spaces.
- Two products, Okalux Plus and Solera considered essentially equal as defined by Massachusetts public procurement regulations. A third equal is not identified, making the product proprietary under these same regulations.
- The proprietary light diffusing glazing products are Solera (Basis of Design) and Okalux Plus (equal).

Section 10 28 00 – Washroom Accessories: Product: Excel Co. "Xlerator" electric hand dryer.

This product is recommended for the following reasons:

- Local company, base in East Longmeadow, MA gives direct economic benefit to the region, is in keeping with the mandated preference for Massachusetts-based products, and contributes to LEED points
- As compared with paper hand towels, this dryer will eliminate paper from the waste stream, use very little electricity, and will greatly reduce the carbon footprint of the facility.
- This is the only dryer that will dry hands in 12- 15 seconds, using a highly efficient blower motor. There are no other comparable dryers on the market that will perform in the same way at the same electrical efficiency.
- The proprietary product will be the "XLerator" hand dryer as manufactured by Excel Co.

Section 23 00 00 – Heating, Ventilating, and Air Conditions: Subcontractor: ENE Systems – Building Management Systems.

This product is recommended for the following reasons:

- ENE Systems is the current subcontractor for 19 other Town Buildings.
- . Maintaining the same subcontractor will facilitate integration of software or other systems and equipment into the Town energy management system.

Section 27 00 00 – Communication Systems: Product: Epson BrightLink 595Wi Interactive Projector

This product is recommended for the following reasons:

- Ultra short throw projector allows the projector to be mounted close to the wall eliminating glare, shadows, and image hotspots for students and teachers.
- 3300 lumen brightness allows for use of the projector in a typical classroom without window darkening treatments.
- The specified projector is the only available product that will allow teachers and students to interact with the image using a stylus or finger, similar to a tablet computer. All other projectors require the use of a "smart stylus" only for image interaction.
- The proprietary product will be the Epson P/N V11H599022 (Brightlink 595Wi Interactive Projector)

Section 28 10 00 – Integrated Security Systems: Access Control System: TruPortal System by Interlogix.

This product is required to be propriety for the following reasons:

- The TruPortal Access Control system is the district wide access control system. Integration with the district standard is required for the project.

PERMANENT PUBLIC BUILDING COMMITTEE

TOWN OF NEEDHAM

MINUTES OF MEETING

Date: January 9, 2017	Time: 7:30 PM	Location: Library

Attendance

PPBC Members:	Present: George Kent, Stuart Chandler, Natasha Espada, Irwin Silverstein Absent: Roy Schifilliti	
PFDC Staff:	Steve Popper (Director of Design and Construction Hank Haff (Sr. Project Manager) Mike Retzky (Project Manager) Steve Gentile (Project Manager)	
User Representatives:	Susan Neckes	School Committee, Hillside Rep.,
	Dennis Condon	Fire Chief, Police/Fire Stations Rep.
	John Schlittler	Police Chief, Police/Fire Stations Rep.
Other Attendees:	Kate Fitzpatrick	Town Manager
	Don Walter	Dore & Whittier Architects
	Michele Rogers	Dore & Whittier Architects
	Mike McKeon	Kaestle Boos Associates
	Todd Costa	Kaestle Boos Associates
	Mark Gluesing	Design Review Board
	Bob Dermody	Design Review Board

Minutes prepared by:	Kathryn Copley	Administrative Specialist

A. Approval of Minutes

The Committee reviewed the minutes from the November 28th and December 12th PPBC meetings. Mr. Kent made a motion that the Committee approve the minutes. Mr. Silverstein seconded the motion. The motion was then voted upon and approved unanimously.

B. Hillside School

Susan Neckes (School Committee), Don Walter and Michele Rogers (D&W) attended the meeting.

The Massachusetts School Building Authority (MSBA) Project Funding Agreement (PFA) for the construction phase of the project has been prepared and signed by Kate Fitzpatrick. A vote is needed from the Committee to authorize Chairman George Kent to sign and execute the PFA.

Mr. Chandler moved that the Committee approve the Project Funding Agreement for the Hillside Elementary School Project and authorize George Kent, Chairman of the Permanent Public Building Committee of the Town of Needham to execute and deliver the PFA and to make final and binding decisions with respect to the Proposed Project on behalf of the Permanent Public Building Committee of the Town of Needham. Ms. Espada seconded the motion. The motion was voted upon and approved unanimously: 5 votes in favor, 0 votes opposed, and 0 votes abstained.

The Design Development package for the MSBA submittal is being prepared. The cost estimate anticipated by January 19, 2017. The Committee requested that the cost data be sent to members in advance of the next scheduled PPBC meeting on January 30th. The cost data will not change the agreement with the MSBA. The Design Development documents will be submitted to the MSBA by February 2, 2017. The construction documents will be submitted to the MSBA by July 31, 2017.

The Architect is working on the LEED's elements, the goal being to achieve the LEED Silver designation. They will determine where best efforts and money should be placed to achieve Silver. An updated draft LEED score card was distributed.

The exterior materials being proposed for the building were reviewed and updated. If estimates come in higher than anticipated some materials may be reduced or exchanged to lower costs. Potential cost saving areas include substituting brick for the Administration wing, reduce landscape items, reduce glazing or use of alternate materials.

There are eleven proprietary materials that are being specified for the project. The reason for including these items are for reasons of product integrating with existing software and equipment, performance, reliability, maintenance issues, and/or anticipated life cycle cost savings. Mr. Kent made a motion that the Committee approve the inclusion of the proprietary items listed in the handout. Ms. Espada seconded the motion. The motion was voted upon and approved unanimously.

Mr. Haff indicated that the updated project schedule is working towards the project starting in November 2017 and finishing in August 2019. It is anticipated that the school will open for the 2019 – 2020 school year. The accelerated schedule has been favorably received by the MSBA, and is included in the PFA.

The Committee reviewed an invoice from Dore & Whittier Architects for DD services in the amount of $240,013.50 for services thru December 2016. The invoice was reviewed and approved by Mr. Haff. Mr. Kent made a motion that the Committee approve the invoice for payment. Mr. Silverstein seconded the motion. The motion was then voted upon and approved unanimously.

The Committee reviewed an invoice from UTS of Massachusetts for soil testing services in the amount of $1,185.00 for services thru December 2016. The invoice was reviewed and approved by Mr. Haff. Mr. Kent made a motion that the Committee approve the invoice for payment. Ms. Espada seconded the motion. The motion was then voted upon and approved unanimously.

Handouts: Agenda, D&W invoice, list of Proprietary materials, LEED items, updated schedule

C. Police & Fire Stations Feasibility Study

John Schlittler (Police Chief), Dennis Condon (Fire Chief), Kate Fitzpatrick (Town Manager), Mark Gluesing, Bob Dermody (Design Review Board), Mike McKeon and Todd Costa (Kaestle Boos) attended the meeting.

Kaestle Boos has had several meetings with various boards and committees regarding the design of the Police and Fire Station #1. The Design Review Board had several comments regarding the street scape presented at an earlier meeting. They indicated that they would like to see changes made to the earlier attempt of including both traditional and contemporary elements in the design, in favor of a more even style across the projects elevation. A greater understanding of the buildings massing was encouraged.

The Committee reviewed an invoice from Kaestle Boos Associates for services in the amount of $29,700.00 for services thru December 2016. The invoice was reviewed and approved by Mr. Retzky. Mr. Kent made a motion that the Committee approve the invoice for payment. Ms. Espada seconded the motion. The motion was then voted upon and approved unanimously.

The Committee reviewed PSS #1 for Kaestle Boos Associates in the amount of $5,500.00 for a land survey for the Daley Parcel. Mr. Kent made a motion that the Committee approve the PSS. Mr. Silverstein seconded the motion. The motion was then voted upon and approved unanimously.

Mr. McKeon reviewed the progress on the project to date. The overall design has not changed in the current design iteration #9. Various small changes have been made. Ms. Espada suggested a deeper development of massing strategy.

The current phasing plan for the Chestnut Street Public Safety Building has the new Fire Station #1, along with the shared dispatch area, being built on the recently purchased Chestnut Street property. The existing Fire Station #1 and police station would remain in the operation during this construction. When the new building is complete the Fire Department would occupy the new building. The Police Department will be housed offsite somewhere as yet to be determined, while the demolition of the existing building takes place and the new police department portion of the building is constructed.

The Fire Station #2 design was reviewed. The building will be two stories on top of a basement level. Possible temporary sites for the fire department are Mills Field and Avery Field and are still under review. Permission to study these sites/parcels was obtained through the Park and Recreation Commission, who have jurisdiction over these sites, on December 12, 2016.

Handouts: Agenda, PSS #1, updated budget

D. Adjournment

The meeting was adjourned at 9:22 PM.
The next PPBC meeting will be on Monday, January 30, 2017 at 7:30 PM, at the Town Hall, Great Plain Room.

These minutes are intended to convey the content of the discussions at the Committee meeting. If no comments are received by the next meeting, they will go to file as part of the permanent Committee record.

A True Copy
Attest:
Town Clerk of Needham, MA

Appendix 02

Hillside Elementary School Project

MSBA # 201301990035

Design Development Schedule
1/25/2017

ID	Task Name	Duration	Start	Finish	Predecessors	Resource Names
1	Final DD & Presentation to PPBC	3 days	Thu 1/26/17	Mon 1/30/17		PPBC Update- Jan 30,2017
2	Submit of Design Dev. to MSBA	1 day?	Thu 2/2/17	Thu 2/2/17	1	DD Submittal to MSBA
3	MSBA Review of Design Development	16 days	Fri 2/3/17	Fri 2/24/17	2	MSBA review
4	Response to MSBA comments	10 days?	Mon 2/27/17	Fri 3/10/17	3	Response to MSBA Comments integr
5	Accelerated Construction Documents	128 days?	Mon 2/6/17	Wed 8/2/17		Construction Docs
6	Construction Docs to 60%	46 days?	Mon 2/6/17	Mon 4/10/17		PPBC - CD 60%
7	60% CD set to Cost Estimators	12 days?	Fri 4/14/17	Mon 5/1/17	6	60% CD to estimators
8	Commissioning Agent Review- 60% CD	15 days?	Mon 4/10/17	Fri 4/28/17		CxA Review- 60% CD
9	Budget Reconciliation & VE	4 days?	Tue 5/2/17	Fri 5/5/17	8	Budget Reconciliation
10	PPBC Update	1 day?	Tue 4/25/17	Tue 4/25/17		PPBC update
11	60% CD Submit to MSBA	1 day?	Wed 5/10/17	Wed 5/10/17	9	60%CD to MSBA
12	MSBA review of 60%CD	15 days?	Thu 5/11/17	Wed 5/31/17	11	MSBA Comments
13	Response to MSBA 60%CD comments	9 days	Thu 6/1/17	Tue 6/13/17	12	Response to MSBA Comments integr
14	Design Review Board - Approval	11 days?	Mon 5/8/17	Mon 5/22/17		DRB- Approvals
15	Submit MPSP Application to PB	1 day?	Tue 4/18/17	Tue 4/18/17		Major Project Special Permit Applicat
16	Planning Board - Approvals	16 days?	Tue 5/23/17	Tue 6/13/17	15	PB - Approvals
17	Submit NOI to Conservation Commission	1 day?	Thu 5/11/17	Thu 5/11/17		Notice of Intent - submission to Con C
18	Conservation Commission - Approvals	11 days?	Thu 5/25/17	Thu 6/8/17	17	CC - Approvals
19	PPBC Appoint Prequalification Committee	1 day?	Mon 4/10/17	Mon 4/10/17		Prequalification Committee Appointed
20	Advertise Prequalification's in CR & NT	1 day?	Thu 4/13/17	Thu 4/13/17		Prequal - Advertisements
21	Prequalification of General Contractors	53 days?	Wed 4/19/17	Fri 6/30/17	20,19	GC Prequalification
22	Prequalification of Filed Sub bidders	53 days?	Wed 4/19/17	Fri 6/30/17		FSB Prequalification
23	Construction Docs to 90%	22 days?	Thu 5/11/17	Fri 6/9/17	6	Const. Docs to 90%
24	Commissioning Agent Review - 90% CD	11 days?	Fri 6/9/17	Fri 6/23/17		
25	90% CD estimating	8 days	Mon 6/12/17	Wed 6/21/17	23	90% CD Estimating
26	Budget Reconciliation	3 days	Thu 6/22/17	Mon 6/26/17	25	Budget Reconciliation
27	PPBC CD update	1 day?	Mon 6/26/17	Mon 6/26/17		PPBC approval of 90% CD
28	90% CD Submittal to MSBA	1 day?	Wed 7/5/17	Wed 7/5/17	27,13	90% CD to MSBA
29	MSBA review of 90% CD	16 days?	Thu 7/6/17	Thu 7/27/17	28	MSBA Comments
30	Response to MSBA 90% CD comments	8 days?	Fri 7/28/17	Tue 8/8/17	29	Response to MSBA
31	Advertise Bid in Cent. Reg. & NT	1 day?	Thu 7/27/17	Thu 7/27/17	21,22	Advertise Bid
32	Final Coordination of Bid Documents	20 days?	Wed 7/5/17	Tue 8/1/17		Bid Docs Available
33	Addendum #1	1 day?	Wed 8/9/17	Wed 8/9/17	30	Addendum #1
34	Addendum #2	1 day?	Wed 8/16/17	Wed 8/16/17	33	Addendum #2(TBD)
35	Filed Sub-Bids Opening	1 day?	Wed 8/23/17	Wed 8/23/17	34	Filed Sub-Bids Opening
36	Addendum with FSB results	1 day?	Mon 8/28/17	Mon 8/28/17	35	Addendum #4 (FSB Info)
37	General Contractor Bids Due	1 day?	Wed 9/13/17	Wed 9/13/17	36	GC Bids Due
38	PPBC update	1 day?	Mon 9/25/17	Mon 9/25/17	37	PPBC- Bid Results
39	OPM & DWA review of bids	8 days	Thu 9/14/17	Mon 9/25/17	37	OPM & DWA review of bids
40	MSBA PFA Agreement update	14 days?	Tue 9/26/17	Fri 10/13/17	38	MSBA -PFA Update
41	PPBC Contract Award	1 day?	Mon 10/16/17	Mon 10/16/17	38	PPBC Award of GC
42	Finalization of Construction Contract	14 days?	Tue 9/26/17	Fri 10/13/17		contract finalization and signatures
43	Contract Award	1 day?	Tue 10/17/17	Tue 10/17/17	42	Contract Award
44	Construction-Schedule to be Finalized by G	424 days	Wed 10/18/17	Mon 6/3/19	43	Substantial Completion
45	Permits	10 days	Wed 10/18/17	Tue 10/31/17	43	Permits
46	Shop Drawings	45 days	Wed 10/18/17	Tue 12/19/17	43	Shop Drawings
47	Mobilize on Site	5 days	Wed 11/1/17	Tue 11/7/17	45	Mobilize on site
48	Site Preparation	25 days	Wed 11/8/17	Tue 12/12/17	47	Site Preparations
49	Site Utilities	30 days	Mon 10/30/17	Fri 12/8/17		Site Utilities
50	Foundations	30 days	Wed 11/1/17	Tue 12/12/17		Foundations
51	Steel Fabrication	40 days	Tue 10/10/17	Mon 12/4/17		Steel Fabrication
52	Steel Erection	30 days	Wed 12/13/17	Tue 1/23/18	51,50	Steel Frame
53	Concrete slabs	30 days	Wed 1/24/18	Tue 3/6/18	52	concrete slabs
54	Roof Insulation & Membrane	25 days	Wed 3/7/18	Tue 4/10/18	53	Roof Insulation & Membrane
55	Envelope framing & Exterior walls	50 days	Wed 3/7/18	Tue 5/15/18	53	Wall frame and finish
56	Window frames & Glass	50 days	Mon 4/30/18	Fri 7/6/18		Window Frames and Glazing
57	Interior Partition Framing	20 days	Mon 7/9/18	Fri 8/3/18	56	Interior Partition Framing
58	Rough MEP/FP/Data/Tel/Tech/AV	45 days	Mon 8/6/18	Fri 10/5/18	57	MEP/FP rough
59	Interior Drywall	35 days	Mon 10/15/18	Fri 11/30/18		Interior Drywall
60	Interior Finishes / Painting	45 days	Mon 12/3/18	Fri 2/1/19	59	Interior Finishes
61	Interior Flooring	21 days	Mon 2/4/19	Mon 3/4/19	60	Interior flooring
62	Cabinetry & built-ins	15 days	Tue 3/5/19	Mon 3/25/19	61	Interior
63	Kitchen Equipment Installation	10 days	Mon 3/4/19	Fri 3/15/19		kitchen Equipment
64	Finish MEP/ FP/Data/Tel/Tech/AV	15 days	Tue 3/5/19	Mon 3/25/19	61	Finish MEP
65	Finish Site work, Grading, Planting	45 days	Mon 3/13/17	Fri 5/12/17		Finish Site Work
66	Commissioning of Equipment	45 days	Tue 3/26/19	Mon 5/27/19	64	Commissioning
67	Substantial Completion	1 day?	Mon 6/3/19	Mon 6/3/19	66	Substantial Completion
68	Playground Equipment Fencing	20 days	Mon 5/15/17	Fri 6/9/17	65	Playground Eq & Fencing
69	Punchlist	33 days	Tue 6/4/19	Thu 7/18/19	67	Punchlist
70	Move in & Setup	34 days	Mon 7/1/19	Thu 8/15/19		Move in & setup
71	Teacher setup & Training	9 days	Thu 8/15/19	Tue 8/27/19		Teacher setup & training
72	Start of School	1 day?	Wed 8/28/19	Wed 8/28/19		Start of School (TDC)
73	Labor Day Holiday	1 day?	Mon 9/2/19	Mon 9/2/19		Labor Day
74	Project Closeout- LEED Certification	109 days?	Mon 6/3/19	Thu 10/31/19		Project closeout and LEED Certificati

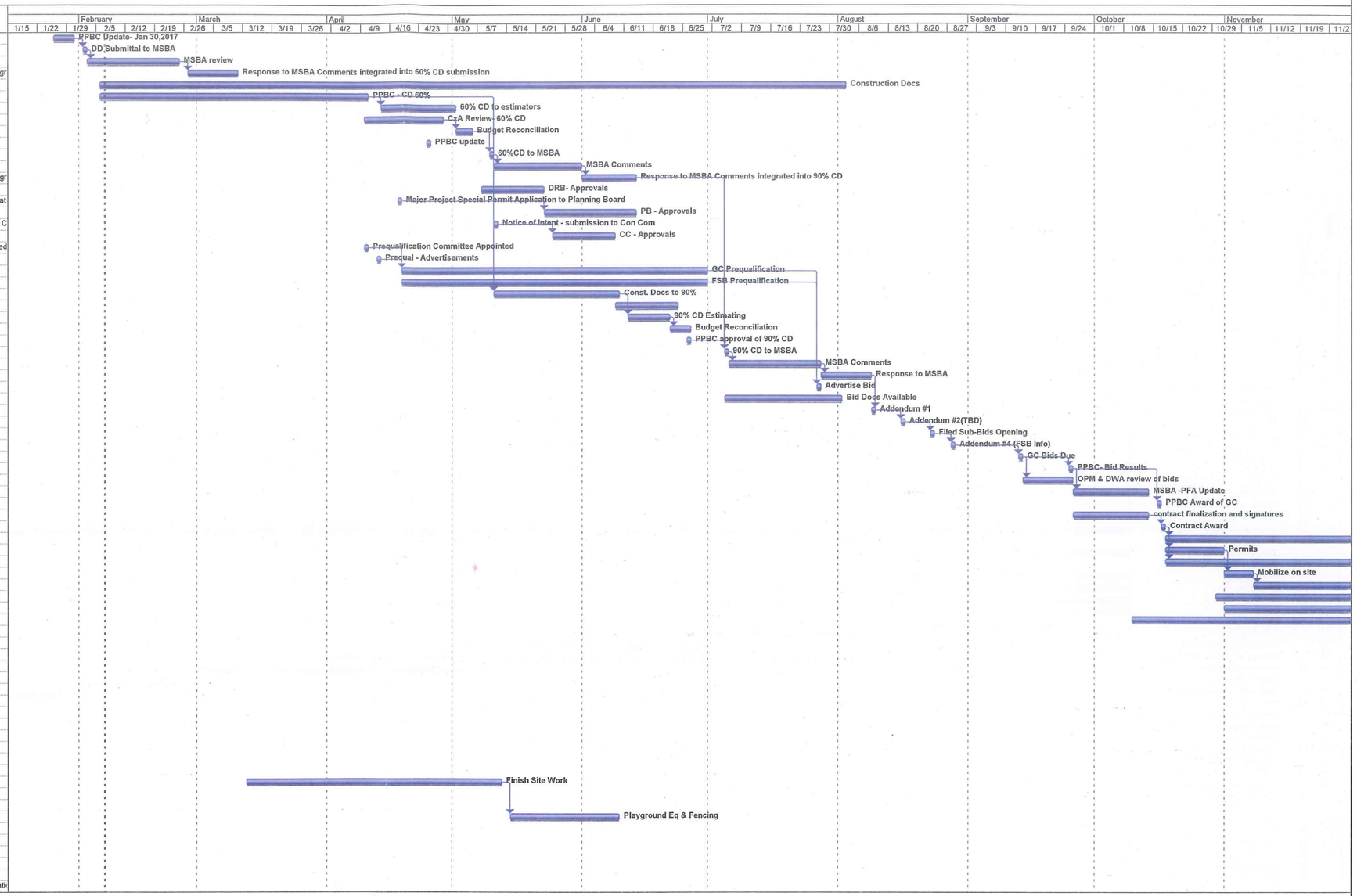

Project: 2017.02.07_Hillside School- S
Date: Tue 2/7/17

Task | Milestone | Rolled Up Task | Rolled Up Progress | External Tasks | Group By Summary
Progress | Summary | Rolled Up Milestone | Split | Project Summary | Deadline

Hillside Elementary School Project

MSBA # 201301990035

Design Development Schedule
1/25/2017

ID	Task Name
1	Final DD & Presentation to PPBC
2	Submit of Design Dev. to MSBA
3	MSBA Review of Design Development
4	Response to MSBA comments
5	Accelerated Construction Documents
6	Construction Docs to 60%
7	60% CD set to Cost Estimators
8	Commissioning Agent Review- 60% CD
9	Budget Reconciliation & VE
10	PPBC Update
11	60% CD Submit to MSBA
12	MSBA review of 60%CD
13	Response to MSBA 60%CD comments
14	Design Review Board - Approval
15	Submit MPSP Application to PB
16	Planning Board - Approvals
17	Submit NOI to Conservation Commission
18	Conservation Commission - Approvals
19	PPBC Appoint Prequalification Committee
20	Advertise Prequalification's in CR & NT
21	Prequalification of General Contractors
22	Prequalification of Filed Sub bidders
23	Construction Docs to 90%
24	Commissioning Agent Review - 90% CD
25	90% CD estimating
26	Budget Reconciliation
27	PPBC CD update
28	90% CD Submittal to MSBA
29	MSBA review of 90% CD
30	Response to MSBA 90% CD comments
31	Advertise Bid in Cent. Reg. & NT
32	Final Coordination of Bid Documents
33	Addendum #1
34	Addendum #2
35	Filed Sub-Bids Opening
36	Addendum with FSB results
37	General Contractor Bids Due
38	PPBC update
39	OPM & DWA review of bids
40	MSBA PFA Agreement update
41	PPBC Contract Award
42	Finalization of Construction Contract
43	Contract Award
44	Construction-Schedule to be Finalized by G
45	Permits
46	Shop Drawings
47	Mobilize on Site
48	Site Preparation
49	Site Utilities
50	Foundations
51	Steel Fabrication
52	Steel Erection
53	Concrete slabs
54	Roof Insulation & Membrane
55	Envelope framing & Exterior walls
56	Window frames & Glass
57	Interior Partition Framing
58	Rough MEP/FP/Data/Tel/Tech/AV
59	Interior Drywall
60	Interior Finishes / Painting
61	Interior Flooring
62	Cabinetry & built-ins
63	Kitchen Equipment Installation
64	Finish MEP/ FP/Data/Tel/Tech/AV
65	Finish Site work, Grading, Planting
66	Commissioning of Equipment
67	Substantial Completion
68	Playground Equipment Fencing
69	Punchlist
70	Move in & Setup
71	Teacher setup & Training
72	Start of School
73	Labor Day Holiday
74	Project Closeout- LEED Certification

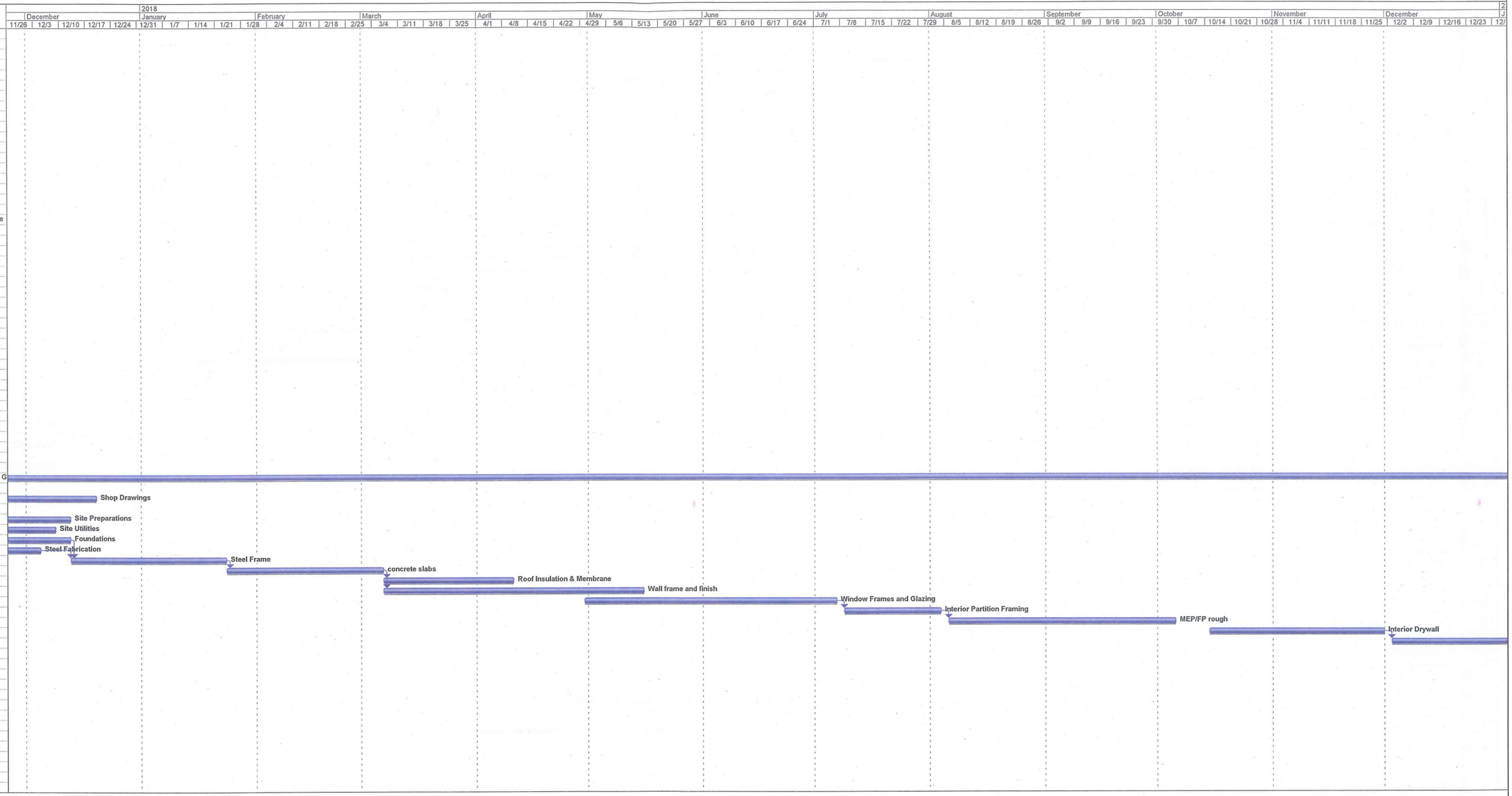

Project: 2017.02.07_Hillside School- S
Date: Tue 2/7/17

Task | Milestone | Rolled Up Task | Rolled Up Progress | External Tasks | Group By Summary
Progress | Summary | Rolled Up Milestone | Split | Project Summary | Deadline

Hillside Elementary School Project

MSBA # 201301990035

Design Development Schedule

1/25/2017

ID	Task Name
1	Final DD & Presentation to PPBC
2	Submit of Design Dev. to MSBA
3	MSBA Review of Design Development
4	Response to MSBA comments
5	Accelerated Construction Documents
6	Construction Docs to 60%
7	60% CD set to Cost Estimators
8	Commissioning Agent Review- 60% CD
9	Budget Reconciliation & VE
10	PPBC Update
11	60% CD Submit to MSBA
12	MSBA review of 60%CD
13	Response to MSBA 60%CD comments
14	Design Review Board - Approval
15	Submit MPSP Application to PB
16	Planning Board - Approvals
17	Submit NOI to Conservation Commission
18	Conservation Commission - Approvals
19	PPBC Appoint Prequalification Committee
20	Advertise Prequalification's in CR & NT
21	Prequalification of General Contractors
22	Prequalification of Filed Sub bidders
23	Construction Docs to 90%
24	Commissioning Agent Review - 90% CD
25	90% CD estimating
26	Budget Reconciliation
27	PPBC CD update
28	90% CD Submittal to MSBA
29	MSBA review of 90% CD
30	Response to MSBA 90% CD comments
31	Advertise Bid in Cent. Reg. & NT
32	Final Coordination of Bid Documents
33	Addendum #1
34	Addendum #2
35	Filed Sub-Bids Opening
36	Addendum with FSB results
37	General Contractor Bids Due
38	PPBC update
39	OPM & DWA review of bids
40	MSBA PFA Agreement update
41	PPBC Contract Award
42	Finalization of Construction Contract
43	Contract Award
44	Construction-Schedule to be Finalized by G
45	Permits
46	Shop Drawings
47	Mobilize on Site
48	Site Preparation
49	Site Utilities
50	Foundations
51	Steel Fabrication
52	Steel Erection
53	Concrete slabs
54	Roof Insulation & Membrane
55	Envelope framing & Exterior walls
56	Window frames & Glass
57	Interior Partition Framing
58	Rough MEP/FP/Data/Tel/Tech/AV
59	Interior Drywall
60	Interior Finishes / Painting
61	Interior Flooring
62	Cabinetry & built-ins
63	Kitchen Equipment Installation
64	Finish MEP/ FP/Data/Tel/Tech/AV
65	Finish Site work, Grading, Planting
66	Commissioning of Equipment
67	Substantial Completion
68	Playground Equipment Fencing
69	Punchlist
70	Move in & Setup
71	Teacher setup & Training
72	Start of School
73	Labor Day Holiday
74	Project Closeout- LEED Certification

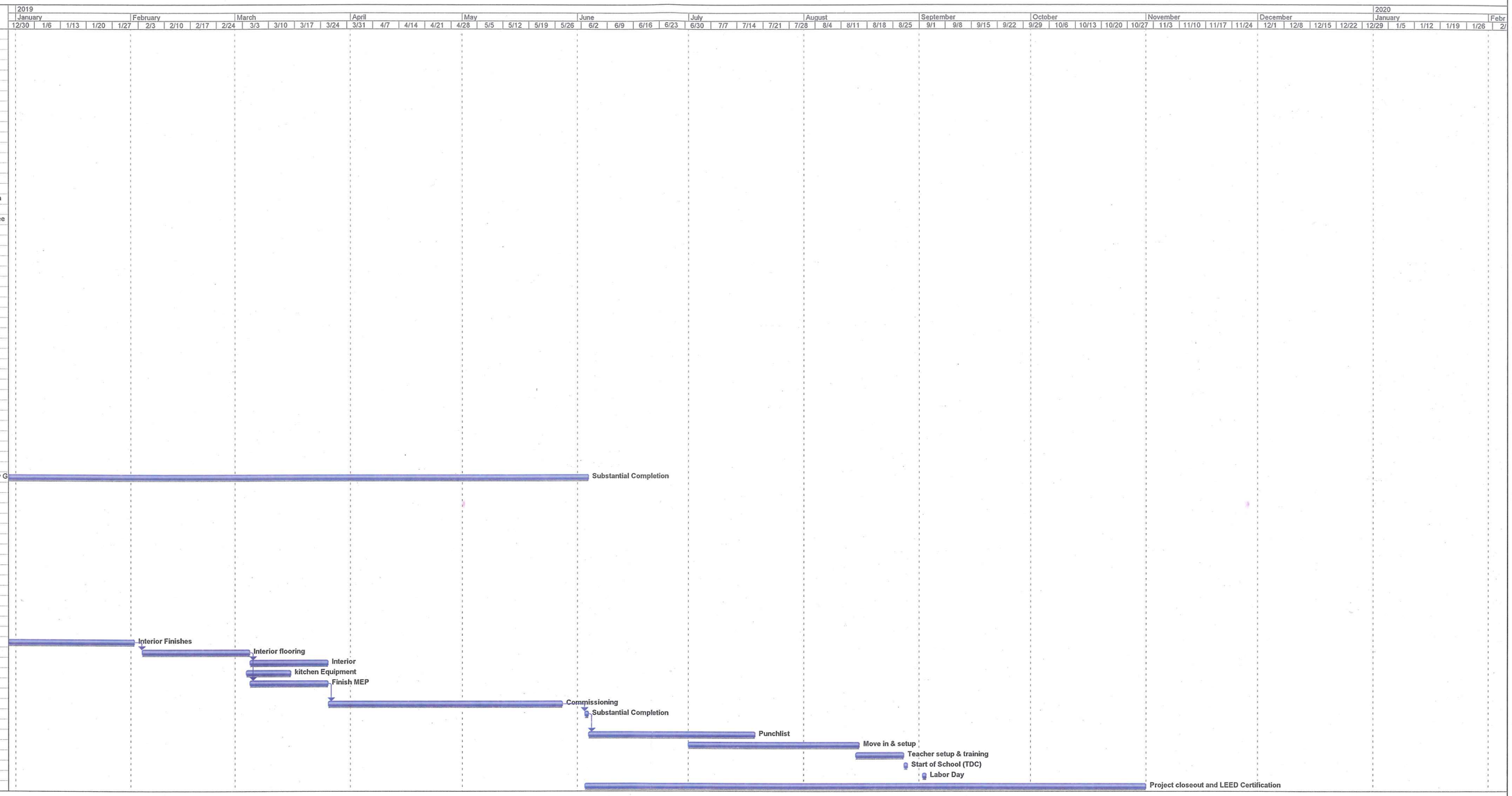

Project: 2017.02.07_Hillside School- S
Date: Tue 2/7/17

Task | Milestone | Rolled Up Task | Rolled Up Progress | External Tasks | Group By Summary
Progress | Summary | Rolled Up Milestone | Split | Project Summary | Deadline

Appendix 03

RFS DD Pricing Set MEP Systems Review Tracking Sheet - Needham Hillside Elementary School

1/24/17

Item No.	Reference Dwg., Detail, Spec #	CxA Comments	Review Period			Action by	Item Resolution	A/E Response (1/27/17)
			DD	60%CD	100%CD			
HVAC								
H1	DD Mechanical Drawings & Specs	In general, the level of development of this documentation is appropriate DD Pricing Set documents.	X			None	Closed	Agree.
H2	DD Mechanical Drawings & Specs	RFS review of this documentation indicates the design intent of the SD HVAC Narrative is adequately reflected.	X			None	Closed	Agree.
H3	Drawing M1.11	RFS notes that in De-escalation rooms a note has been provided to install an immersion temperature sensor in the return air duct. What is this device intended to do? Is it to take the place of a room temperature sensor? If so, a sequence of operation in the BAS details should be provided.	X			Mech. Engineer	Open	It is the intent to keep devices/equipment out of the space in the de-escalation room where an occupant may become destructive. This device may be changed to a wall mounted panel thermostat controlled through the BMS. Similar to how we would expect to see entryway UH's controlled.
H4	Duct/Piping Drawings	Which M drawings will space temperature and CO2 sensors be located on . . . Duct or piping? Currently some of these sensors are shown on both. Many are still missing . . . Typical of DD set docs.	X			Mech. Engineer	Open	This will be updated to show sensors on the piping plans. This will also indicate approximate tie-ins to control valve locations.
H5	Drawing M1.11	Kiln exhaust is shown. Exhaust fan schedule (M4.11) is not yet complete and does not show kiln exhaust fan. As plans progress, ensure sequence of operation is provided for the kiln exhaust system.	X			Mech. Engineer	Open	Sequence will be provided/updated and schedule will be finalized as design progresses.
H6	Drawing M1.11	There appears to be an air volume imbalance in Self Contained Rm 115. There is 1600 CFM return but only 425 CFM supply from VAV box?	X			Mech. Engineer	Open	CFM's have since been updated.
H7	Drawing M1.11	No supply air is required for the Kiln room?	X			Mech. Engineer	Open	The space is reliant on make-up air from the adjacent space. It is the intent to keep the space with a significant negative pressure, particularly during kiln operation. The kiln is not expected to run frequently during a normal school year.

RFS DD Pricing Set MEP Systems Review Tracking Sheet - Needham Hillside Elementary School

1/24/17

Item No.	Reference Dwg., Detail, Spec #	CxA Comments	Review Period			Action by	Item Resolution	A/E Response (1/27/17)
			DD	60%CD	100%CD			
H8	Drawing M1.12	Main Electric room is transferring air from the gymnasium space. Does this transfer duct require a fire damper in the wall?	X			Mech. Engineer	Open	Per the architectural code plan, the Main Electrical room is a 1-hour rated space. Therefore, a firedamper is not required as the duct construction suits this purpose. However, this will be reviewed with Electrical and Plumbing to ensure proper systems are in place.
H9	Drawing M1.21	Consider relocating the supply air duct tap in the riser which is connected to the VAV box serving VP Office 219	X			Mech. Engineer	Open	Will review and update.
H10	Drawing M1.22	Consider locating the supply air diffuser and return air register further apart from each other in Custodian Office 271	X			Mech. Engineer	Open	This has been updated.
H11	Drawing M1.32	A H&V-1 unit is indicated. Is this intended to be RTU-9?	X			Mech. Engineer	Open	Yes. This has been updated.
H12	Drawing M2.12	References and enlarged Mechanical Room Plan which does not appear to have been created as of yet.	X			Mech. Engineer	Open	Enlarged Mechanical Room Plan is on drawing M1.12 as Item 2. Note has been updated.
H13	Drawing M4.11	Mechanical Schedules are only partially complete. This is normal for DD documents. RFS will review in detail in subsequent stages of construction document development	X			Mech. Engineer	Closed	Agree.
H14	Mechanical Drawings & Specs	RFS notes that glycol (35%) has been indicated to be provided for the chilled water system and some heating components (see Unit Heater Schedule). Ensure if glycol is utilized in hot water system that all hot water capacities are based upon glycol and not water. Also, there does not appear to be a specification for glycol/water treatment in the mechanical specifications.	X			Mech. Engineer	Open	This has been updated on plan/schedule. Only the chilled water system will utilize/require glycol at present. Will review further for future submissions and add remove information as necessary.
H15	Drawing M4.13	The Typical Boiler Piping detail shows a modulating control valve. What is this intended for? Boilers are gas.	X			Mech. Engineer	Open	The modulating control valve is utilized as an isolation valve on the HW piping to avoid hot water from traveling in the nonoperational boiler.
H16	Drawing M4.14	Details are provided for Unit Ventilators and Fan Coil Units. It does not appear that this equipment is actually being used. Also, drawing M4.15 provides duplicate details for these same units.	X			Mech. Engineer	Open	Unit ventilator detail has been removed. Fan Coil Unit remains. This may be included for above ceiling, concealed units in lieu of typical cabinet unit heaters (which can't be concealed)

RFS DD Pricing Set MEP Systems Review Tracking Sheet - Needham Hillside Elementary School

1/24/17

Item No.	Reference Dwg., Detail, Spec #	CxA Comments	Review Period			Action by	Item Resolution	A/E Response (1/27/17)
			DD	60%CD	100%CD			
H17	Drawing M4.14	RFS notes that the ductless cooling units are to be provided with condensate floats in the drain pan for alarming purposes. The DCU specifications do not appear to require provision of this device.	X			Mech. Engineer	Open	This is indicated within the DCU schedule.
H18	Drawing M5.11	The sequence of operation for the ductless cooling units and the BAS detail require a BacNet interface. The DCU specifications do not appear to be providing a BacNet interface.	X			Mech. Engineer	Open	The BACNet interface is provided by the manufacturer and is indicated on the schedule.
H19	Drawings M4.16 & M5.12	The boiler piping schematic on M4.16 does not include automatic boiler isolation valves but M5.12 does show these valves. This appears to be a conflict.	X			Mech. Engineer	Open	One diagram is intended for the HVAC Contractor. The other is furnishings for the ATC Contractor. Not all valves/control etc will necessarily be provided on both drawings.
H20	Drawing M4.16	No DDC temperature sensors are shown on the Hot Water Flow diagram and RFS suggests adding these sensors.	X			Mech. Engineer	Open	Will review and update as necessary.
H21	Drawing M5.11	The ATC Front End Interface diagram shows a weather station. Is this actually to be provided for this project?	X			Mech. Engineer	Open	Will confirm with Arch./OPM.
H22	Drawing M5.11	The Miscellaneous BMS Control diagram indicates a hi/lo alarm for neutralization tanks and flow switches for science rooms are to be provided. RFS does not believe these devices are part of the project design.	X			Mech. Engineer	Open	Agree. This has been udpated.
H23	Drawing M5.13	The diagram associated with the RTU sequence of operations indicates separate cooling and heating coils associated with the Dx portion of the RTU. The RTU specifications do not appear to reflect this requirement.	X			Mech. Engineer	Open	Modulating hot gas reheat is indicated in section 2.12.C.2.j and 2.12.O.9 of the specification. Controls for hot gas reheat are indicated in section 2.12.Q
H24	Drawing M5.13	The RTU diagram indicates a manufacturer provided controller for the RTU with interface to the BAS. The RTU specifications state that the unit is to be provided "stripped" of controls and all controls are to be provided by the BAS contractor.	X			Mech. Engineer	Open	Disagree. A unit controller is indicated, however, it does not state that the controller is provided by the manufacturer. The terminal strip for the controller to connect to should be provided by manuf.

RFS DD Pricing Set MEP Systems Review Tracking Sheet - Needham Hillside Elementary School

1/24/17

Item No.	Reference Dwg., Detail, Spec #	CxA Comments	Review Period DD	60%CD	100%CD	Action by	Item Resolution	A/E Response (1/27/17)
H25	Drawing M5.15	Is the kitchen space open to the Cafeteria space? If so, space pressure control may be difficult to properly achieve as required by the sequence of operation.	X			Mech. Engineer	Open	Yes, they are communicating spaces. The kitchen and cafeteria will be pressure neutral during normal occupancy. During kitchen use cooking times, pressure will be utilized based on the dishwasher/hood exhaust and limiting make-up air from the make-up air unit using typical kitchen design practice. The kitchen will always be negative to any adjacent space during cooking times.
H26	Drawing M5.15	The VAV diagram shows interface to the lighting control occupancy/motion sensor. Suggest clarifying the intent of this interface. Is this interface to be a hard wired connection to a local occupancy sensor contact or via a BacNet communication interface to the lighting control system?	X			Mech. Engineer	Open	It is the intent to have control integration via BACNet communication from the lighting control panel. See "Lighting Control Interface" diagram on drawing M5.12 for more information.
ELECTRICAL								
E-1	DD Electrical Drawings & Specs	In general, the level of development of this documentation is appropriate to DD Pricing documents.	X			None	Closed	
E2	DD Electrical Drawings & Specs	RFS review of this documentation indicates the design intent of the SD Electrical Narrative is adequately reflected.	X			None	Closed	
E3	Drawing E2.12	No power appears to have yet been provided for the duplex sanitary pump system located in Room 134B	X			Elec Eng	Open	Equipment has been tagged on E2.12 and scheduled on E3.05.
E4	Lighting Drawings	Circuits have not yet been assigned. This is typical of DD documentation and RFS will review in detail in subsequent construction document development stages.	X			Elec Eng	Closed	
E5	Power Drawings	Circuits have not yet been assigned. This is typical of DD documentation and RFS will review in detail in subsequent construction document development stages.	X			Elec Eng	Closed	
E6	Electrical Power Drawings	Suggest providing a location for the emergency generator remote annunciator panel.	X			Elec Eng	Open	Has been located on E2.22.

RFS DD Pricing Set MEP Systems Review Tracking Sheet - Needham Hillside Elementary School

1/24/17

Item No.	Reference Dwg., Detail, Spec #	CxA Comments	Review Period			Action by	Item Resolution	A/E Response (1/27/17)
			DD	60%CD	100%CD			
E7	Electrical Power Drawings	Suggest providing locations and power forall building automation system (BAS) panels. Ensure the BAS panels are powered from emergency circuits.	X			Elec Eng	Open	The BAS panels are provided by the ATC Contractor. Refer to Specification Section 23 00 01. 2.26. 8.
E8	Drawing E2.22	The receptacle provided in Water Entrance 270 should be GFC	X			Elec Eng	Open	Receptacle has been marked GFI on Drawing E2.22.
PLUMBING								
P-1	DD Plumbing Drawings & Specs	In general, the level of development of this documentation is appropriate to DD Pricing Set documents	X			None	Closed	
P2	DD Plumbing Drawings & Specs	RFS review of this documentation indicates the design intent of the SD Plumbing Narrative is adequately reflected.	X			None	Closed	
P3	Drawing P0.02	Suggest providing a remote alarm to the BAS from the duplex sanitary pump station in addition to the local audible alarm	X			Plumb Eng	Open	Will connect to BAS.
P4	Drawing P1.12	The water heater piping in the boiler room appears to be schematic in nature at this time and not reflective of desired final piping arrangement.	X			Plumb Eng	Open	Will continue to develop. Detail for water heater is shown on Drawing P0.02.
P5	Drawing P0.02	There does not appear to have been a 140 DegF water line included in the Schematic HW Heater/Storage Tank Piping diagram	X			Plumb Eng	Open	Will show on detail and include 140 degree F. recirc. pump.

Appendix 04

Fail-Safe

DESCRIPTION

The Fail-Safe HVSL provides style with strength. Steel end caps and steel body provides strength while an extruded linear ribbed polycarbonate lens obscures the LED image and spreads light evenly. The HVSL is ideal for areas where the need for aesthetics and protection from vandalism are critical. Perfect for stairwells, schools, hospitals, corridors, dormitories, public restrooms, common areas, and transit stations.

Catalog #		Type
Project		
Comments		Date
Prepared by		

SPECIFICATION FEATURES

Housing
Heavy duty, 18 ga. steel housing and end caps provide rigid construction. Stainless-steel and die-formed aluminum available. End caps provided with 7/8" knockouts for continuous row mounting. Finished in matte white standard. Optional architectural colors available.

Fasteners
Hex-head screws (4) secure the lens to the housing. Stainless steel TORX® with center reject pin and allen head set screws optional.

Lens
One-piece extruded UV stabilized opal polycarbonate standard. Optional clear ribbed polycarbonate.Unique linear ribbed design provides even light distribution while obscuring lamp image and direct glare. Internal ribs reduce dirt build-up and make cleaning easier. Nominal lens thickness = 0.135". Lifetime lens warranty (see page 2 for details).

Reflector
20 ga. CRS with white high reflectance polyester powder coat finish. Reflector serves as driver and wireway cover.

Light-Emitting Diode (LED)
LEDs available in 3000K, 3500K, 4000K and 5000K with CRI > 85. Projected life is 50,000 hours at 70% lumen maintenance.

Transformer/Driver
Electronic, 0-10V dimming standard.

Labels
ETL listed for damp locations, wall or ceiling mount.
IP63 rated optional.

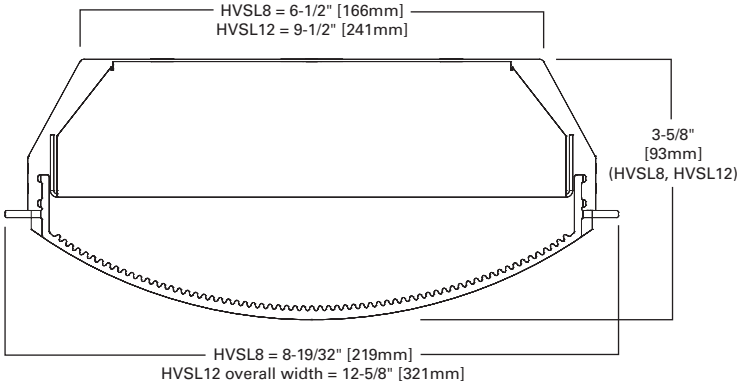

MOUNTING DETAIL

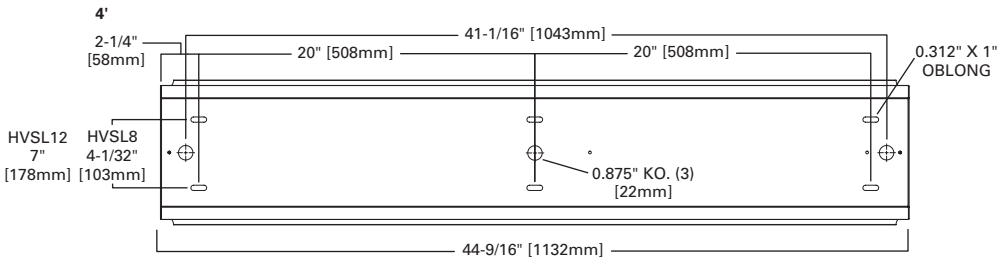

(8' unit cnsists of (2) 4' units, attached at the factory)

HVSL

LD4 LED

8", 12" Width
Vandal Resistant Linear LED
Steel Housing

Polycarbonate Lens

15 Days Quick-Ship

ENERGY DATA

For Energy Management related technical data to support the performance of this fixture series, refer to the ordering information for input wattage.

SAMPLE NUMBERS: HVSL8-4-LD4-2STD-40-UNV-C-EDC1 or HVSL12-4-LD4-3HI-50-UNV-O-EDC1

Product Family	Length	LED Type	Number of LED Modules	Illumination Level	Color Temperature	Voltage	Lens Type	Driver	No. of Circuits	Options	Finish
		LD4				UNV					

Product Family
- **HVSL8**=8" Wide HVSL Linear Steel 2', 4' & 8' Lengths
- **HVSL12**=12" Wide HVSL Linear Steel 2', 4' & 8' Lengths

Length
- **2**=2' Length
- **4**=4' Length
- **8**=8' Length [2]

LED Type
- **LD4**=LED, Version 4.0

Number of LED Modules
- **1**=(1) LED Module in Cross-section
- **2**=(2) LED Modules in Cross-section
- **3**=(3) LED Modules in Cross-section (HVSL12 only)

Illumination Level
- **STD**=Standard
- **LO**=Low
- **HI**=High [3]

Color Temperature
- **30**=3000 Kelvin
- **35**=3500 Kelvin
- **40**=4000 Kelvin
- **50**=5000 Kelvin

Voltage
- **UNV** =120-277V

Lens Type
- **O**=Opal Smooth, Polycarbonate (no ribs)
- **C**=Clear Ribbed, Polycarbonate (ribs to inside)

Driver
- **EDC_**=Electronic Driver, [6] Non-Dimming
- **EDD_**=Electronic Driver, [6] 0-10V Dimming, 10%
- **ED1D_**=Electronic Driver, [6] 0-10V Dimming, 1%

No. of Circuits
- **1**= 1 Circuit
- **2**= 2 Circuits
- **3**= 3 Circuits (HVSL12 only)

Options
- **OS1**=Integrated Motion/Occupancy Sensor (within lens) connected to 1 LED module [1]
- **OS2**=Integrated Motion/Occupancy Sensor (within lens) connected to 2 LED modules [1]
- **OSE1**=Occupancy Sensor Mounted in End External Box, Connected to One LED Module (box attached to end plate) (FS305)
- **OSE2**=Occupancy Sensor Mounted in End External Box, Connected to Two LED Modules (box attached to end plate) (FS305)
- **OSES1**=Occupancy Sensor Mounted in Side External Box, Connected to One LED Module (FS505)
- **OSES2**=Occupancy Sensor Mounted in Side External Box, Connected to Two LED Modules (FS505)
- **EL7W**=7W EM Battery Pack
- **EL10W**=10W EM Battery Pack
- **EL14W**=14W EM Battery Pack
- **SF1**=TORX® T20 Vandal Resistant Screws
- **SHP**=Stainless Steel Painted Housing
- **SHPA**=Stainless Steel Painted, all Fabricated Components
- **ALH**=Aluminum Painted Housing
- **ALHA**=Aluminum Painted, all Fabricated Components
- **GSKLNS**=Gasket to Lens - Side and Ends

Finish
- **Blank**=Matte White
- **BK**=Black
- **DP**=Dark Platinum
- **BZ**=Bronze

Custom colors available. Furnish RAL number or paint manufacturer/catalog number, or color chip. Consult Technical Support for proper catalog logic.

Accessories (Order Separately)
- **VRSD**=T20 Center Pin Tamperproof TORX®-head bit

Notes:
1. Voltage specific 120 or 277.
2. 8 ft. unit consists of (2) 4 ft. housings joined together at the factory with single 8 ft. lens.
3. Available in LO or STD only with Emergency option (2 module HVSL8 and 3 module HVSL12).
4. Not available in 2' fixture length.
5. Specify voltage.
6. Purple and gray low voltage driver lends connected to driver for EDD1, EDD2, EDD3. Not connected for EDC1, EDC2, EDC3.

15 Days Quick-Ship

15 Day Quick Ship

Product	Length	LED	# of Modules	Level	Color Temp	Voltage	Opal Lens	Driver/ Circuits	Option
QS-HVSL8	4	LD4	1	LO STD HI	35 40 50	UNV	O	EDC1 EDC2	EL7W
			2						EL14W
									GLR

Maximum order quantity is 50 pieces
15 days from receipt of Purchase Order at Eaton Facility to shipment from Eaton Facility
EL available LO and STD for 2 module QS-HVSL8

Example Catalog #: QS-HVSL8-4-LD4-2HI-40-UNV-O-EDC1

NOMINAL INPUT WATTS/DELIVERED LUMENS - 3500K, CLEAR LENS

Fixture	Length	# Modules in Cross-Section	Illumination Level	Nominal Input Watts	Nominal Delivered Lumens
HVSL8	2'	1	LO	13.1	1060
			STD	18.3	1455
			HI	23.6	1825
		2	LO	26.2	2150
			STD	36.2	2890
			HI	47.2	3575
	4'	1	LO	26.2	2175
			STD	36.6	2915
			HI	41.2	3645
		2	LO	52.4	4300
			STD	73.2	5778
			HI	94.4	7166
HVSL12	2'	2	LO	26.2	2081
			STD	36.6	2795
			HI	47.2	3475
		3	LO	78.6	3017
			STD	109.8	4050
			HI	141.6	5040
	4'	2	LO	52.4	4161
			STD	73.2	5614
			HI	94.4	7334
		3	LO	78.6	5721
			STD	110	8120
			HI	141.6	10260

- Nominal input wattage values include LED voltage, drive currents and typical driver efficiency. Refer to LM 79 data/photometric files for exact delivered lumen values and input wattage. Values in table are nominal values only.
- Nominal 15% reduction in delivered lumens when using opal lens.
- For 8' fixture delivered lumens, multiply 4' unit by a factor of 2.

Lens Lifetime Warranty

Fail-Safe will repair or provide a replacement lens for any HVSL lens found to be inoperative due to physical abuse for the duration of the installation. Fail-Safe will not warranty product against some forms of anti-social human behavior involving corrosive chemicals, fire, paint or gunfire.

Powering Business Worldwide

Eaton
1121 Highway 74 South
Peachtree City, GA 30269
P: 770-486-4800
www.eaton.com/lighting

Specifications and dimensions subject to change without notice.

SPECIFICATIONS

LIGHTPLANE 1

LP1R | Recessed

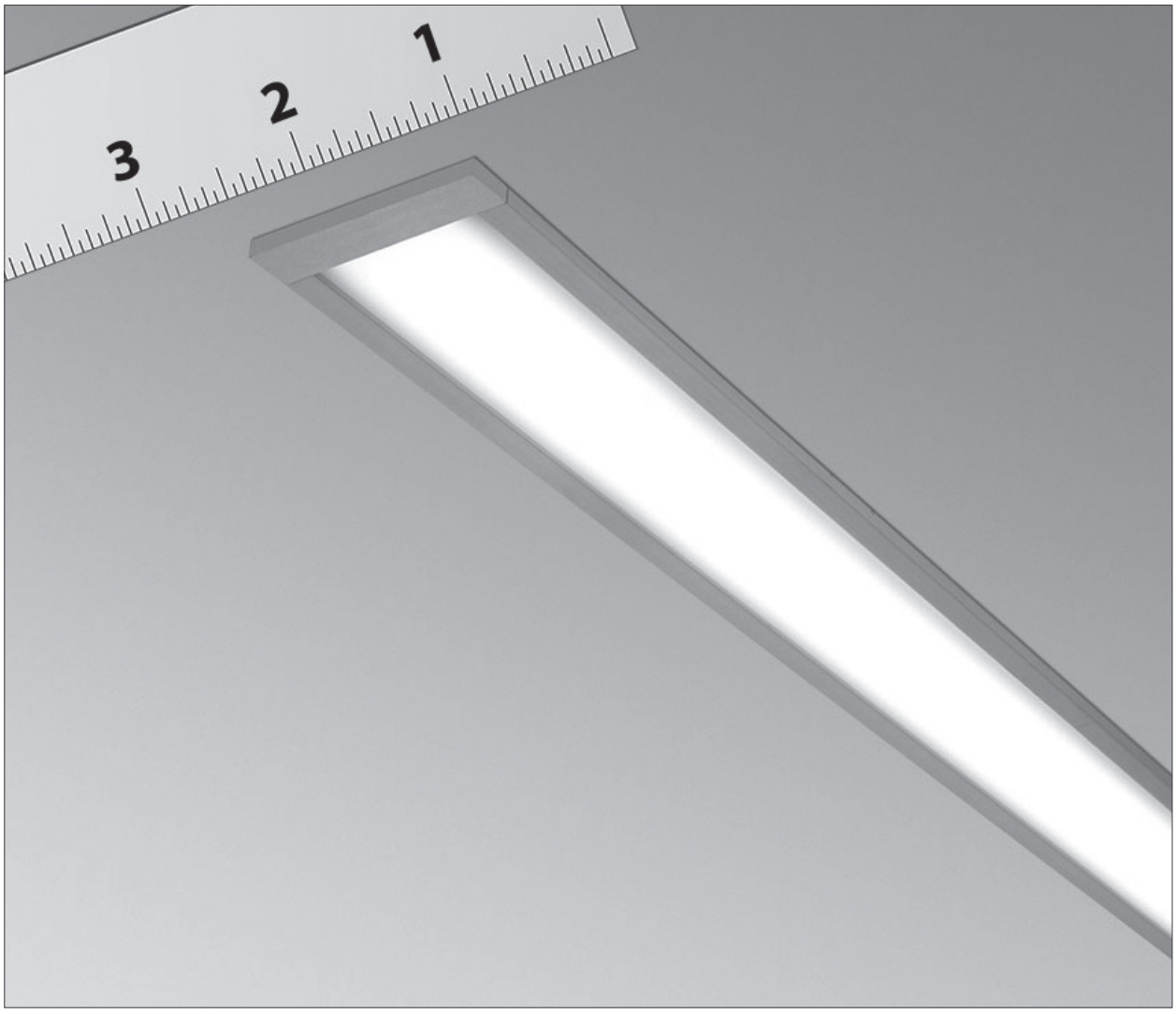

ALW
ARCHITECTURAL LIGHTING WORKS

Find additional images and information at
alwusa.com/lp1r

LIGHTPLANE 1 – LP1R
Recessed

1. BASE MODEL

LP1RT	1" recessed trimmed
LP1RMUD[1]	1" recessed trimless

[1]*Not available with DECOR lamping in Section 4*

2. RUN LENGTH/ SIZE

___	Individual (2', 3', 4', 5', 6', 7' or 8')
___	Continuous row or Configuration[2] *(enter total linear length, ex: 20')*

[2]*A configuration is a custom shape (rectangle square, L, etc.) with mitered corners. Must choose quantity of mitered corners in Additional Options.*

All lengths are nominal and may vary based on lamping and other specification selections. Consult factory when exact lengths are required.

3. CEILING TYPE

DRY	Drywall
TGRID	T-Grid
SLOT	Slot T-Bar
OTHER	Additional ceiling types may be available. Contact factory.

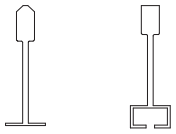

TGRID SLOT

4. LAMPING

LED[3]	*Pair lamping with CCT (where applicable), ex: MED/2700K*
LOW[4]	Low-output, high-performance LED – 397 delivered lm/ft, 7.2 W/lf, 55 lm/W **2700K 3000K 3500K 4000K**
MED	Medium-output, high performance LED – 529 delivered lm/ft, 9.6 W/lf, 55 lm/W **2700K 3000K 3500K 4000K**
HI[4]	High-output, high-performance LED – 661 delivered lm/ft, 12 W/lf, 55 lm/W **2700K 3000K 3500K 4000K**
DECOR1[4,5]	Decorative constant voltage LED, 194 delivered lm/ft, 5.9 W/lf, 33 lm/W **3000K 3500K 4000K**

[3]*LED board options may be limited and/or substituted to accommodate requests for exact, non-standard overall run lengths (ex: 3' 9"). Consult factory.*

[4]*Performance calculations are extrapolated estimates based on the actual IES test results of MED option at 3500K*

[5]*Not available with base model LP1RMUD in Section 1*

5. REMOTE DRIVER

0/10V/[6]	0-10V dimming *(Pair driver with dimming % below, ex: 0/10V/10%* **10%** Standard dimming to 10% **1%** Dimming to 1%
DALI[6]	DALI flicker-free dimming down to 0%
DMX[6]	DMX flicker-free dimming down to 0%
HILUME/A3[6]	Lutron® Hi-Lume™ A L3D Series EcoSystem® or 3-wire with flicker-free dimming down to 1%
NONDIM	Non-dimming driver

Driver option may be limited with 347 voltage. Consult factory.

[6]*When specified with LOW, MED or HI LEDs, perceptible shadowing will be visible on the lens surface when dimmed below 15%.*

© 2016 Architectural Lighting Works. Specifications subject to change without notice. Limited warranty. Complete terms available on website.

A 1035 22nd Avenue, Unit 1 · Oakland, CA 94606 P 510.489.2530 E TalkToUs@alwusa.com W alwusa.com

LIGHTPLANE 1 – LP1R
Recessed

6. LENS

EXT/F	Extra diffuse, flush lens
EXT/R	Extra diffuse, reveal *(extends below fixture by 1/4")*

7. FINISH

AL	Natural "Ultimatte" aluminum
BK	Black powdercoat
WH	White powdercoat
RAL/ ___	RAL powdercoat color (ex: RAL37)

8. VOLTAGE

120	120 volt
277	277 volt
UNV	Universal voltage
347[7]	347 volt

[7]*Driver/ballast options may be limited with 347 voltage. Consult factory.*

9. ADDITIONAL OPTIONS

EMB___[8]	Remote Emergency battery pack *(indicate total quantity, ex: EMB/4)*
EMC___[8]	Emergency circuit *(indicate total quantity, ex: EMC/4)*
ENLGHT/___[9,10,11]	Enlighted® remoted smart sensor *(occupancy, daylight, networking and more)*
OS/___[10]	0-10V remoted occupancy sensor *(indicate total quantity, ex: OS/4)*
PH___[10]	0-10V remoted photocell/daylight sensor *(indicate total quantity, ex: PH/4)*
MC/___	Mitered corners *(indicate total quantity, ex: MC/4 for a rectangle)*

[8]*Consult factory for available options*

[9]*Enlighted Gateway and Energy Manager (by others) plus programming required. Learn more at enlightedinc.com.*

[10]*Compatible with 0-10V driver only. Contact factory for alternative options.*

[11]*Select quantity of 1 for every 8 ft. (ex:ENLGHT3 for a 24' fixture run; OS4 for a 32' fixture run)*

DIMENSIONS

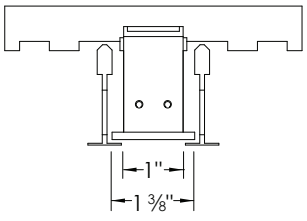

LP1RT
TGRID

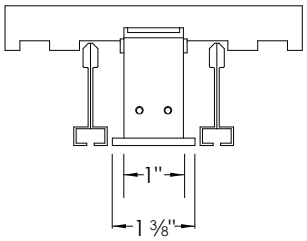

LP1RT
SLOT

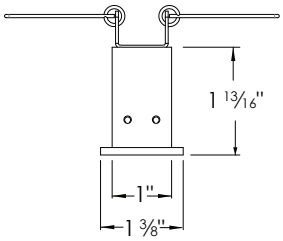

LP1RT
DRY

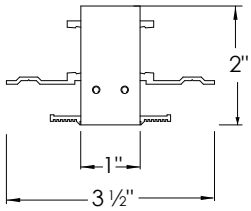

LP1RMUD
DRY

© 2016 Architectural Lighting Works. Specifications subject to change without notice. Limited warranty. Complete terms available on website.

A 1035 22nd Avenue, Unit 1 · Oakland, CA 94606 P 510.489.2530 E TalkToUs@alwusa.com W alwusa.com

LIGHTPLANE 1 – LP1R
Recessed

HOUSING

100% recyclable, extruded architectural grade T6061 aluminum with .08" minimum wall thickness.

ELECTRICAL

Class 2 remote drivers are provided with 10' plenum-rated cable. ETL listed for damp location.

EMERGENCY

Luminaires can be wired for emergency circuit. Emergency battery backup NOT available.

MITERED CORNERS

Consult factory for mitered corner angle options

LINEAR LENS OPTIONS

Extruded, twin-layered, high-impact acrylic. EXT is white and extra diffuse with minimal-to-no source visibility. Choose from flush or reveal (dropped).

FLUSH LENS – EXT/F

REVEAL LENS – EXT/R

FINISH

Standard finish is "Ultimatte" aluminum — a smooth, clean and durable finish achieved from a deep-etch and two-step clear anodizing process. White, black and color RAL powdercoat options also available.

"Ultimatte" Aluminum – AL

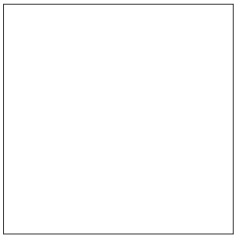

White – WH

Black – BK

Color – RAL

MAXIMUM REMOTE DRIVER DISTANCE*

Driver	18 Wire Gauge		18 Wire Gauge w/ Remote Emergency	
	LOW,MED,HI	DECOR	LOW,MED,HI	DECOR
0/10V/	120 ft	18 ft	10 ft	10ft
DALI DMX	72 ft	Consult Factory	10 ft	Consult Factory
HILUME/A3	22 ft	15 ft	10 ft	10 ft

* Maximum distance includes length of power feed cable suspended from remote driver to luminaire.

Ex: 72' max length - 3' suspension = 69' available to run from remote driver to building power.

© 2016 Architectural Lighting Works. Specifications subject to change without notice. Limited warranty. Complete terms available on website.

A 1035 22nd Avenue, Unit 1 · Oakland, CA 94606 P 510.489.2530 E TalkToUs@alwusa.com W alwusa.com

Corelite

DESCRIPTION

The Jaylum LED is a timeless direct/indirect pendant featuring crisp modern lines and the latest solid state lighting and driver technology. This highly efficient luminaire will accompany almost any décor while meeting today's increasingly stringent energy requirements. The Jaylum series may be mounted individually or continuously with 4 and 8 foot modular sections and is suited for open offices, private offices, conference rooms, reception areas, and educational facilities. Companion wall mount and sconce fixtures are also available to create cohesive architectural spaces.

Catalog #		Type
Project		
Comments		Date
Prepared by		

SPECIFICATION FEATURES

Construction
Low profile housing and integral gear tray constructed from die-formed 20 gauge cold rolled steel forming a 8-1/2" x 1-1/2" profile. Fixture weight = 4.0 lb/ft.

Reflectors
Reflector pan is painted with a high reflectance white powder coat finish.

End Caps
Standard endcaps are rounded die cast aluminum and mechanically attached flush to end of fixture without exposed fasteners. End cap adds 1/2" at each end.

Shielding
Bottom lens is high light transmission 0.08" thick frosted acrylic material. Optional top cover optics allow up/down light distribution adjustment. Top lens is 0.06" thick acrylic and does not protrude above fixture housing.

Electrical
Long-Life LED system coupled with electronic driver to deliver optimal performance. LEDs are available in 3000K, 3500K or 4000K with a typical CRI ≥ 85. Standard drivers are 0-10 volt continuous dimming that work with any 0-10V control/dimmer. Or, specify the Digital Addressable Lighting Interface (DALI) drivers; for use with Fifth Light controls. See ordering information for details.

Mounting
"Y" aircraft cable mounts on 4'-0" and 8'-0" centers. Refer to installation instructions for various ceiling interface details. Minimum mounting height from ceiling to top of fixture is 8".

Finish
Fixture housings are high reflectance white (standard) using electrostatically applied polyester powder coat paint. Silver and custom colors are available.

Compliance
Components are UL recognized and luminaires are cULus listed for 25° C ambient environments, damp location listed, and RoHS compliant.

Life and Warranty
Greater than 86% lumen maintenance expected at 60,000 hours, based off LM-80 test data and TM-21 standards. Five-year warranty.

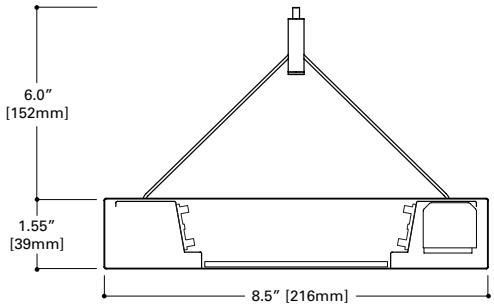

Fixture Lengths

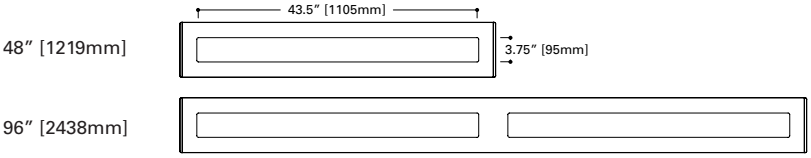

JAYLUM - J3

Micro Prismatic/
Frosted Lens

LED

Suspended
Indirect/Direct

powered by fifthlight technology

ORDERING INFORMATION

Sample Number: J3-UL-3L35-1D-UNV-AC48-T1-56'-STD-W

Series	Optics Up (%Up/%Down)	Optics Down	Light Level (per 4' section, 3500K)	Color Temperature	Number of Circuits	Wiring	Input Voltage
J3 = Jaylum Suspended Indirect/Direct	**U** = Open Top (Standard, 84/16) **C** = Clear Top Optic (76/24) **F** = Frosted Top Optic (66/34)	**L** = Frosted Lens	**1** = Light Level 1 (2991 Lms, 23.5 W) **2** = Light Level 2 (3986 Lms, 31.5 W) **3** = Light Level 3 (4900 Lms, 39.9 W) **4** = Light Level 4 (6218 Lms, 52.2 W) **5** = Light Level 5 (7485 Lms, 64.9 W)	**L30** = LED 3000K **L35** = LED 3500K **L40** = LED 4000K	**1** = 1 Circuit	**C** = Switched Circuit [2] **D** = Dimming [2][3] **B** = Battery Pack [4] **E** = Emergency Circuit **T** = Night Light **Y** = Daylight	**120** = 120V **277** = 277V **UNV** = Universal (120V-277V)

Suspension/ Power Feed	Suspension Length	Ceiling Type	Run Length	Driver Options	Integral Sensor (Optional)	Finish
AC = Aircraft cable with straight power cord	**Adjustable Cable** 48", 120", 240", 300", or 360"	**T1** = 1" T-Bar **T9** = 9/16" T-Bar **TS** = Slotted T-Bar **ST** = Structure **JB** = 4" Octagonal J-Box	**4** = 4 ft **8** = 8 ft **XX** = Specify Row Length [5]	**STD** = Standard 0-10V **5LT** = Fifth Light DALI [6] **STP** = Step-Dim (Bi-Level)	**DS** = Integral Daylight Sensor [7] **2S** = Integral Occupancy/ Daylight Sensor [7]	**W** = White **S** = Silver **CC** = Custom Color

See page 2 for technical notes

PHOTOMETRICS

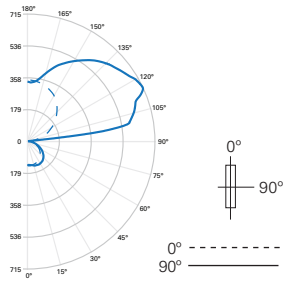

FILE NAME: J3-UL-1L35-1D-UNV-4.IES

LAMP: (LD4) LED 3500K

LUMENS: 2991 Lm

WATTS: 23.5

EFFICACY: 127 Lm/W

TEST NO.: P26578

84% UP / 16% DOWN

ZONAL LUMENS SUMMARY

Zone	Lumens	% Fixture
0°-30°	116	3.9
0°-90°	479	16
90°-130°	1563	52.3
90°-180°	2512	84
0°-180°	2991	100

LUMINANCE DATA (CD/M²)

Vertical Angle	0°	45°	90°
45°	1371	1559	1707
55	1358	1541	1706
65°	1304	1461	1619
75°	1138	1248	1395
85°	872	763	872

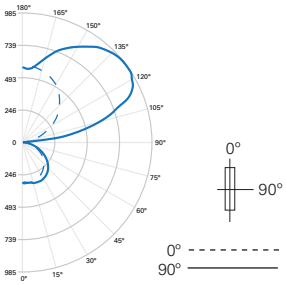

FILE NAME: J3-CL-3L35-1D-UNV-4.IES

LAMP: (LD4) LED 3500K

LUMENS: 4453 Lm

WATTS: 39.8 W

EFFICACY: 112 Lm/W

TEST NO.: P26581

76% UP / 24% DOWN

ZONAL LUMENS SUMMARY

Zone	Lumens	% Fixture
0°-30°	261	5.9
0°-90°	1066	23.9
90°-130°	1842	41.4
90°-180°	3388	76.1
0°-180°	4453	100

LUMINANCE DATA (CD/M²)

Vertical Angle	0°	45°	90°
45°	3104	3454	3722
55°	3965	3413	3694
65°	2923	3238	3485
75°	2533	2753	2974
85°	1853	1853	1962

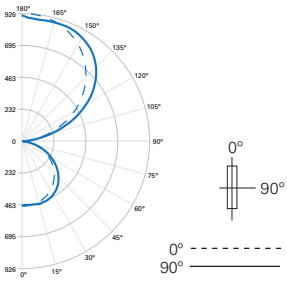

FILE NAME:J3-FL-3L35-1D-UNV-4.IES

LAMP: (LD4) LED 3500K

LUMENS: 4456 Lm

WATTS: 39.8 W

EFFICACY: 112 Lm/W

TEST NO.: P26582

66% UP / 34% DOWN

ZONAL LUMENS SUMMARY

Zone	Lumens	% Fixture
0°-30°	381	8.6
0°-90°	1499	33.6
90°-130°	1177	26.4
90°-180°	2957	66.4
0°-180°	4456	100

LUMINANCE DATA (CD/M²)

Vertical Angle	0°	45°	90°
45°	4461	4811	5053
55°	4373	4721	4953
65°	4159	4429	4677
75°	3598	3818	4002
85°	2508	2617	2726

LUMEN MAINTENANCE

Ambient Temperature	TM-21 Lumen Maintenance (60,000 hours)	Theoretical L70 (Hours)
25°C	>86%	161,000

ENERGY AND PERFORMANCE DATA

4' – J3 LED Light Level Outputs and Distributions (3500K)						
Lens	Light Level	Delivered Lumens	Wattage	Efficacy (LPW)	Distribution	
					% Up	% Down
J3-UL	1	2991	23.5	127	84%	16%
	2	3986	31.5	127		
	3	4900	39.9	123		
	4	6218	52.2	119		
	5	7485	64.9	115		
J3-CL	1	2718	23.5	116	76%	24%
	2	3622	31.5	115		
	3	4453	39.9	112		
	4	5651	52.2	108		
	5	6802	64.9	105		
J3-FL	1	2720	23.5	116	66%	34%
	2	3625	31.5	115		
	3	4456	39.9	112		
	4	5655	52.2	108		
	5	6807	64.9	105		

TECHNICAL NOTES

1. Lumen values vary depending on color temperature and lens option. Refer to photometric data for specific lumen values.
2. Dimming wires come standard in all LED fixtures but can be capped in the field for standard switched operation.
3. When dimming is selected, a separate drop for low voltage control wires supplied as standard. A single drop may be supplied upon request.
4. For delivered lumens, take lumens per watt of desired fixture and multiply by 12 watts (100 lp/W x 12 = 1200 lumens delivered).
5. Standard row configurations over 8' consist of 4' and 8' luminaires.
6. Must be used in conjunction with a DALI control system. For a complete listing of Fifth Light Technology products and other solutions from Cooper Controls, visit www.coopercontrol.com.
7. Integral sensor works only with 0-10V driver and is factory prewired to the driver for stand-alone control.

Powering Business Worldwide

Eaton
18001 E. Colfax Avenue
Aurora, CO 80011
P: 303-393-1522
www.eaton.com/lighting

Specifications and dimensions subject to change without notice.

PS524003EN
08/28/2015

Corelite

DESCRIPTION

The Jaylum LED is a timeless direct/indirect pendant featuring crisp modern lines and the latest solid state lighting and driver technology. This highly efficient luminaire will accompany almost any décor while meeting today's increasingly stringent energy requirements. The Jaylum series may be mounted individually or continuously with 4 and 8 foot modular sections and is suited for open offices, private offices, conference rooms, reception areas, and educational facilities. Companion wall mount and sconce fixtures are also available to create cohesive architectural spaces.

Catalog #		Type
Project		
Comments		Date
Prepared by		

SPECIFICATION FEATURES

Construction
Low profile housing and integral gear tray constructed from die-formed 20 gauge cold rolled steel forming a 8-1/2" x 1-1/2" profile. Fixture weight = 4.0 lb/ft.

Reflectors
Reflector pan is painted with a high reflectance white powder coat finish.

End Caps
Standard endcaps are rounded die cast aluminum and mechanically attached flush to end of fixture without exposed fasteners. End cap adds 1/2" at each end.

Shielding
Bottom lens is high light transmission 0.08" thick frosted acrylic material. Optional top cover optics allow up/down light distribution adjustment. Top lens is 0.06" thick acrylic and does not protrude above fixture housing.

Electrical
Long-Life LED system coupled with electronic driver to deliver optimal performance. LEDs are available in 3000K, 3500K or 4000K with a typical CRI ≥ 85. Standard drivers are 0-10 volt continuous dimming that work with any 0-10V control/dimmer. Or, specify the Digital Addressable Lighting Interface (DALI) drivers; for use with Fifth Light controls. See ordering information for details.

Mounting
"Y" aircraft cable mounts on 4'-0" and 8'-0" centers. Refer to installation instructions for various ceiling interface details. Minimum mounting height from ceiling to top of fixture is 8".

Finish
Fixture housings are high reflectance white (standard) using electrostatically applied polyester powder coat paint. Silver and custom colors are available.

Compliance
Components are UL recognized and luminaires are cULus listed for 25° C ambient environments, damp location listed, and RoHS compliant.

Life and Warranty
Greater than 86% lumen maintenance expected at 60,000 hours, based off LM-80 test data and TM-21 standards. Five-year warranty.

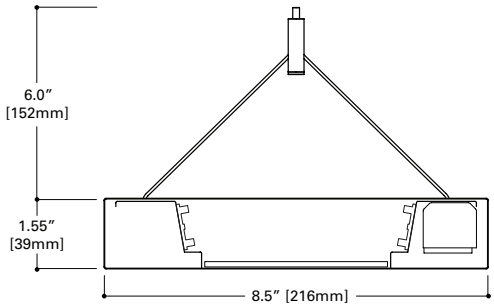

Fixture Lengths

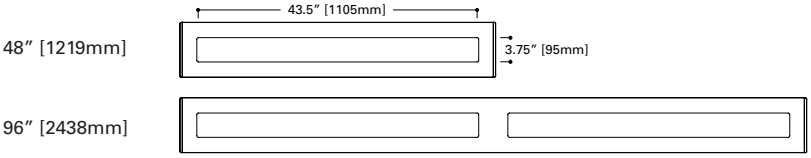

JAYLUM - J3

Micro Prismatic/
Frosted Lens

LED

Suspended
Indirect/Direct

powered by fifthlight technology

ORDERING INFORMATION

Sample Number: J3-UL-3L35-1D-UNV-AC48-T1-56'-STD-W

Series	Optics Up (%Up/%Down)	Optics Down	Light Level (per 4' section, 3500K)	Color Temperature	Number of Circuits	Wiring	Input Voltage
J3 = Jaylum Suspended Indirect/Direct	**U** = Open Top (Standard, 84/16) **C** = Clear Top Optic (76/24) **F** = Frosted Top Optic (66/34)	**L** = Frosted Lens	**1** = Light Level 1 (2991 Lms, 23.5 W) **2** = Light Level 2 (3986 Lms, 31.5 W) **3** = Light Level 3 (4900 Lms, 39.9 W) **4** = Light Level 4 (6218 Lms, 52.2 W) **5** = Light Level 5 (7485 Lms, 64.9 W)	**L30** = LED 3000K **L35** = LED 3500K **L40** = LED 4000K	**1** = 1 Circuit	**C** = Switched Circuit [2] **D** = Dimming [2][3] **B** = Battery Pack [4] **E** = Emergency Circuit **T** = Night Light **Y** = Daylight	**120** = 120V **277** = 277V **UNV** = Universal (120V-277V)

Suspension/ Power Feed	Suspension Length	Ceiling Type	Run Length	Driver Options	Integral Sensor (Optional)	Finish
AC = Aircraft cable with straight power cord	**Adjustable Cable** 48", 120", 240", 300", or 360"	**T1** = 1" T-Bar **T9** = 9/16" T-Bar **TS** = Slotted T-Bar **ST** = Structure **JB** = 4" Octagonal J-Box	**4** = 4 ft **8** = 8 ft **XX** = Specify Row Length [5]	**STD** = Standard 0-10V **5LT** = Fifth Light DALI [6] **STP** = Step-Dim (Bi-Level)	**DS** = Integral Daylight Sensor [7] **2S** = Integral Occupancy/ Daylight Sensor [7]	**W** = White **S** = Silver **CC** = Custom Color

See page 2 for technical notes

PHOTOMETRICS

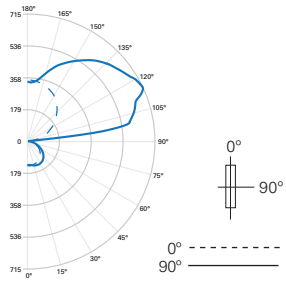

FILE NAME: J3-UL-1L35-1D-UNV-4.IES

LAMP: (LD4) LED 3500K

LUMENS: 2991 Lm

WATTS: 23.5

EFFICACY: 127 Lm/W

TEST NO.: P26578

84% UP / 16% DOWN

ZONAL LUMENS SUMMARY

Zone	Lumens	% Fixture
0°-30°	116	3.9
0°-90°	479	16
90°-130°	1563	52.3
90°-180°	2512	84
0°-180°	2991	100

LUMINANCE DATA (CD/M²)

Vertical Angle	0°	45°	90°
45°	1371	1559	1707
55	1358	1541	1706
65°	1304	1461	1619
75°	1138	1248	1395
85°	872	763	872

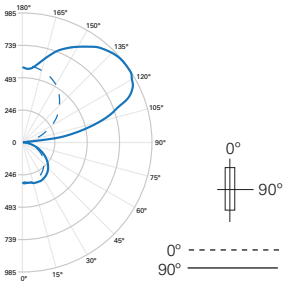

FILE NAME: J3-CL-3L35-1D-UNV-4.IES

LAMP: (LD4) LED 3500K

LUMENS: 4453 Lm

WATTS: 39.8 W

EFFICACY: 112 Lm/W

TEST NO.: P26581

76% UP / 24% DOWN

ZONAL LUMENS SUMMARY

Zone	Lumens	% Fixture
0°-30°	261	5.9
0°-90°	1066	23.9
90°-130°	1842	41.4
90°-180°	3388	76.1
0°-180°	4453	100

LUMINANCE DATA (CD/M²)

Vertical Angle	0°	45°	90°
45°	3104	3454	3722
55°	3965	3413	3694
65°	2923	3238	3485
75°	2533	2753	2974
85°	1853	1853	1962

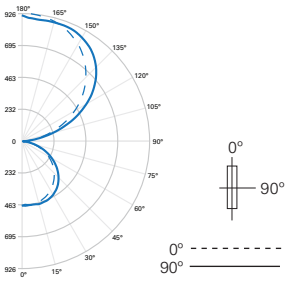

FILE NAME:J3-FL-3L35-1D-UNV-4.IES

LAMP: (LD4) LED 3500K

LUMENS: 4456 Lm

WATTS: 39.8 W

EFFICACY: 112 Lm/W

TEST NO.: P26582

66% UP / 34% DOWN

ZONAL LUMENS SUMMARY

Zone	Lumens	% Fixture
0°-30°	381	8.6
0°-90°	1499	33.6
90°-130°	1177	26.4
90°-180°	2957	66.4
0°-180°	4456	100

LUMINANCE DATA (CD/M²)

Vertical Angle	0°	45°	90°
45°	4461	4811	5053
55°	4373	4721	4953
65°	4159	4429	4677
75°	3598	3818	4002
85°	2508	2617	2726

LUMEN MAINTENANCE

Ambient Temperature	TM-21 Lumen Maintenance (60,000 hours)	Theoretical L70 (Hours)
25°C	>86%	161,000

ENERGY AND PERFORMANCE DATA

4' – J3 LED Light Level Outputs and Distributions (3500K)						
Lens	Light Level	Delivered Lumens	Wattage	Efficacy (LPW)	Distribution	
					% Up	% Down
J3-UL	1	2991	23.5	127	84%	16%
	2	3986	31.5	127		
	3	4900	39.9	123		
	4	6218	52.2	119		
	5	7485	64.9	115		
J3-CL	1	2718	23.5	116	76%	24%
	2	3622	31.5	115		
	3	4453	39.9	112		
	4	5651	52.2	108		
	5	6802	64.9	105		
J3-FL	1	2720	23.5	116	66%	34%
	2	3625	31.5	115		
	3	4456	39.9	112		
	4	5655	52.2	108		
	5	6807	64.9	105		

TECHNICAL NOTES

1. Lumen values vary depending on color temperature and lens option. Refer to photometric data for specific lumen values.
2. Dimming wires come standard in all LED fixtures but can be capped in the field for standard switched operation.
3. When dimming is selected, a separate drop for low voltage control wires supplied as standard. A single drop may be supplied upon request.
4. For delivered lumens, take lumens per watt of desired fixture and multiply by 12 watts (100 lp/W x 12 = 1200 lumens delivered).
5. Standard row configurations over 8' consist of 4' and 8' luminaires.
6. Must be used in conjunction with a DALI control system. For a complete listing of Fifth Light Technology products and other solutions from Cooper Controls, visit www.coopercontrol.com.
7. Integral sensor works only with 0-10V driver and is factory prewired to the driver for stand-alone control.

Powering Business Worldwide

Eaton
18001 E. Colfax Avenue
Aurora, CO 80011
P: 303-393-1522
www.eaton.com/lighting

Specifications and dimensions subject to change without notice.

PS524003EN
08/28/2015

Corelite

DESCRIPTION

The Jaylum LED is a timeless direct/indirect pendant featuring crisp modern lines and the latest solid state lighting and driver technology. This highly efficient luminaire will accompany almost any décor while meeting today's increasingly stringent energy requirements. The Jaylum series may be mounted individually or continuously with 4 and 8 foot modular sections and is suited for open offices, private offices, conference rooms, reception areas, and educational facilities. Companion wall mount and sconce fixtures are also available to create cohesive architectural spaces.

Catalog #		Type
Project		
Comments		Date
Prepared by		

SPECIFICATION FEATURES

Construction
Low profile housing and integral gear tray constructed from die-formed 20 gauge cold rolled steel forming a 8-1/2" x 1-1/2" profile. Fixture weight = 4.0 lb/ft.

Reflectors
Reflector pan is painted with a high reflectance white powder coat finish.

End Caps
Standard endcaps are rounded die cast aluminum and mechanically attached flush to end of fixture without exposed fasteners. End cap adds 1/2" at each end.

Shielding
Bottom lens is high light transmission 0.08" thick frosted acrylic material. Optional top cover optics allow up/down light distribution adjustment. Top lens is 0.06" thick acrylic and does not protrude above fixture housing.

Electrical
Long-Life LED system coupled with electronic driver to deliver optimal performance. LEDs are available in 3000K, 3500K or 4000K with a typical CRI ≥ 85. Standard drivers are 0-10 volt continuous dimming that work with any 0-10V control/dimmer. Or, specify the Digital Addressable Lighting Interface (DALI) drivers; for use with Fifth Light controls. See ordering information for details.

Mounting
"Y" aircraft cable mounts on 4'-0" and 8'-0" centers. Refer to installation instructions for various ceiling interface details. Minimum mounting height from ceiling to top of fixture is 8".

Finish
Fixture housings are high reflectance white (standard) using electrostatically applied polyester powder coat paint. Silver and custom colors are available.

Compliance
Components are UL recognized and luminaires are cULus listed for 25° C ambient environments, damp location listed, and RoHS compliant.

Life and Warranty
Greater than 86% lumen maintenance expected at 60,000 hours, based off LM-80 test data and TM-21 standards. Five-year warranty.

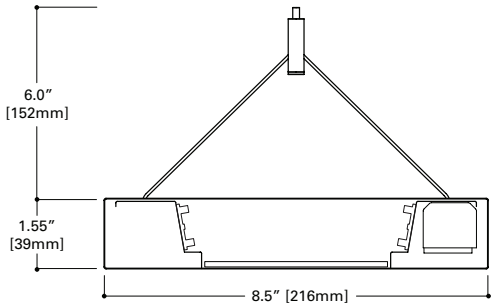

Fixture Lengths

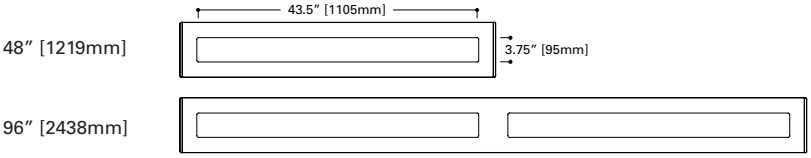

JAYLUM - J3

Micro Prismatic/
Frosted Lens

LED

Suspended
Indirect/Direct

powered by fifthlight technology

ORDERING INFORMATION

Sample Number: J3-UL-3L35-1D-UNV-AC48-T1-56'-STD-W

Series	Optics Up (%Up/%Down)	Optics Down	Light Level (per 4' section, 3500K)	Color Temperature	Number of Circuits	Wiring	Input Voltage
J3 = Jaylum Suspended Indirect/Direct	**U** = Open Top (Standard, 84/16) **C** = Clear Top Optic (76/24) **F** = Frosted Top Optic (66/34)	**L** = Frosted Lens	**1** = Light Level 1 (2991 Lms, 23.5 W) **2** = Light Level 2 (3986 Lms, 31.5 W) **3** = Light Level 3 (4900 Lms, 39.9 W) **4** = Light Level 4 (6218 Lms, 52.2 W) **5** = Light Level 5 (7485 Lms, 64.9 W)	**L30** = LED 3000K **L35** = LED 3500K **L40** = LED 4000K	**1** = 1 Circuit	**C** = Switched Circuit [2] **D** = Dimming [2][3] **B** = Battery Pack [4] **E** = Emergency Circuit **T** = Night Light **Y** = Daylight	**120** = 120V **277** = 277V **UNV** = Universal (120V-277V)

Suspension/ Power Feed	Suspension Length	Ceiling Type	Run Length	Driver Options	Integral Sensor (Optional)	Finish
AC = Aircraft cable with straight power cord	**Adjustable Cable** 48", 120", 240", 300", or 360"	**T1** = 1" T-Bar **T9** = 9/16" T-Bar **TS** = Slotted T-Bar **ST** = Structure **JB** = 4" Octagonal J-Box	**4** = 4 ft **8** = 8 ft **XX** = Specify Row Length [5]	**STD** = Standard 0-10V **5LT** = Fifth Light DALI [6] **STP** = Step-Dim (Bi-Level)	**DS** = Integral Daylight Sensor [7] **2S** = Integral Occupancy/ Daylight Sensor [7]	**W** = White **S** = Silver **CC** = Custom Color

See page 2 for technical notes

PHOTOMETRICS

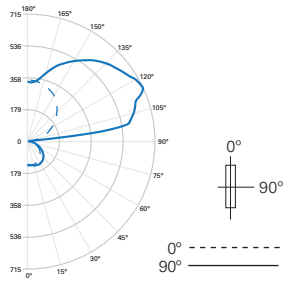

FILE NAME: J3-UL-1L35-1D-UNV-4.IES

LAMP: (LD4) LED 3500K

LUMENS: 2991 Lm

WATTS: 23.5

EFFICACY: 127 Lm/W

TEST NO.: P26578

84% UP / 16% DOWN

ZONAL LUMENS SUMMARY

Zone	Lumens	% Fixture
0°-30°	116	3.9
0°-90°	479	16
90°-130°	1563	52.3
90°-180°	2512	84
0°-180°	2991	100

LUMINANCE DATA (CD/M²)

Vertical Angle	0°	45°	90°
45°	1371	1559	1707
55	1358	1541	1706
65°	1304	1461	1619
75°	1138	1248	1395
85°	872	763	872

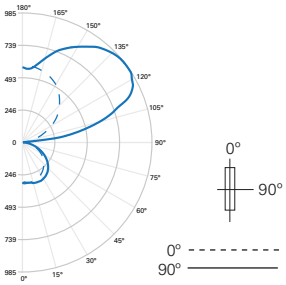

FILE NAME: J3-CL-3L35-1D-UNV-4.IES

LAMP: (LD4) LED 3500K

LUMENS: 4453 Lm

WATTS: 39.8 W

EFFICACY: 112 Lm/W

TEST NO.: P26581

76% UP / 24% DOWN

ZONAL LUMENS SUMMARY

Zone	Lumens	% Fixture
0°-30°	261	5.9
0°-90°	1066	23.9
90°-130°	1842	41.4
90°-180°	3388	76.1
0°-180°	4453	100

LUMINANCE DATA (CD/M²)

Vertical Angle	0°	45°	90°
45°	3104	3454	3722
55°	3965	3413	3694
65°	2923	3238	3485
75°	2533	2753	2974
85°	1853	1853	1962

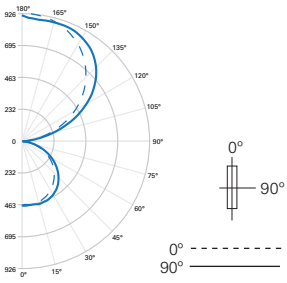

FILE NAME:J3-FL-3L35-1D-UNV-4.IES

LAMP: (LD4) LED 3500K

LUMENS: 4456 Lm

WATTS: 39.8 W

EFFICACY: 112 Lm/W

TEST NO.: P26582

66% UP / 34% DOWN

ZONAL LUMENS SUMMARY

Zone	Lumens	% Fixture
0°-30°	381	8.6
0°-90°	1499	33.6
90°-130°	1177	26.4
90°-180°	2957	66.4
0°-180°	4456	100

LUMINANCE DATA (CD/M²)

Vertical Angle	0°	45°	90°
45°	4461	4811	5053
55°	4373	4721	4953
65°	4159	4429	4677
75°	3598	3818	4002
85°	2508	2617	2726

LUMEN MAINTENANCE

Ambient Temperature	TM-21 Lumen Maintenance (60,000 hours)	Theoretical L70 (Hours)
25°C	>86%	161,000

ENERGY AND PERFORMANCE DATA

4' – J3 LED Light Level Outputs and Distributions (3500K)						
Lens	Light Level	Delivered Lumens	Wattage	Efficacy (LPW)	Distribution	
					% Up	% Down
J3-UL	1	2991	23.5	127	84%	16%
	2	3986	31.5	127		
	3	4900	39.9	123		
	4	6218	52.2	119		
	5	7485	64.9	115		
J3-CL	1	2718	23.5	116	76%	24%
	2	3622	31.5	115		
	3	4453	39.9	112		
	4	5651	52.2	108		
	5	6802	64.9	105		
J3-FL	1	2720	23.5	116	66%	34%
	2	3625	31.5	115		
	3	4456	39.9	112		
	4	5655	52.2	108		
	5	6807	64.9	105		

TECHNICAL NOTES

1. Lumen values vary depending on color temperature and lens option. Refer to photometric data for specific lumen values.
2. Dimming wires come standard in all LED fixtures but can be capped in the field for standard switched operation.
3. When dimming is selected, a separate drop for low voltage control wires supplied as standard. A single drop may be supplied upon request.
4. For delivered lumens, take lumens per watt of desired fixture and multiply by 12 watts (100 lp/W x 12 = 1200 lumens delivered).
5. Standard row configurations over 8' consist of 4' and 8' luminaires.
6. Must be used in conjunction with a DALI control system. For a complete listing of Fifth Light Technology products and other solutions from Cooper Controls, visit www.coopercontrol.com.
7. Integral sensor works only with 0-10V driver and is factory prewired to the driver for stand-alone control.

Powering Business Worldwide

Eaton
18001 E. Colfax Avenue
Aurora, CO 80011
P: 303-393-1522
www.eaton.com/lighting

Specifications and dimensions subject to change without notice.

PS524003EN
08/28/2015

HBF 200W

HIGH BAY LED SERIES

SpecGrade LED's versatile industrial grade LED flood fixture is rated IP65 and engineered for the dual purpose of either a LED SportsLighter. Available in both a 30,000 lumens (300 Watt) and 40,000 lumens (400 Watt replaces a 1000 Watt metal halide). This LED fixture is available with either an acrylic lens or a 60° or 120° aluminum reflector.

HBF HIGH BAY

UP TO 146 lm/w

AVAILABLE IN 70W TO 200W

EXPECTED LIFE OVER 100,000 HRS.

REVIT & IES FILES AVAILABLE AT WWW. SPECGRADELED.COM

RATED IP 65

1/2 IN. NPT (DOWNROD NOT INCLUDED)

DIE CAST ALUMINUM HEAT SINK

DIE CAST ALUMINUM HEAT SINK

CLEAR OR FROSTED LENS (OPTIONAL)

LUMILEDS LUXEON-T DELIVERS EXCEPTIONAL BEAM UNIFORMITY

ACRYLIC DIFFUSOR LENS PERFECT FOR LARGE INDOOR APPLICATIONS (OPTIONAL)

NATATORIUM RATED FINISH (OPTIONAL)

Corrosive resistant powder coated finish

Stainless steel hardware

Chlorine resistant treated gasket

PHOTOMETRICS

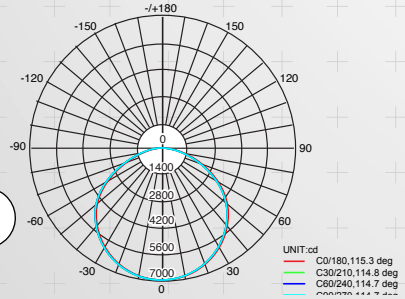

HBF
(WITHOUT ACRYLIC LENS)
120° BEAM

HBF: HIGH BAY LED

70W, 90W, 150W & 200W

REPLACES UP TO A 500-WATT METAL HALIDE FIXTURE

CABLE MOUNT STANDARD

SPECIFICATIONS

Expected life: Over 100,000 hrs.
Rating: IP 65
Color Rendering Index (CRI): >70
Operating temp: -40°F–122°F
(Also available: -40°F –140°F)
Power factor: >0.98%
Input line voltage: 90-305 VAC
347-480V step-down
transfomer optional (see below)
Input line frequency: 50/60 Hz
LED efficiency:
- warm white, 131 lm/w
- natural white, 141 lm/w
- cool white, 146 lm/w

MISC SPECS

LED chips: Lumileds Luxeon-T
Driver: UL approved Meanwell
(Philips optional)
Dimmable: 0-10V (optional)
Occupancy sensor: (optional)
Hanging weight:
70W & 90W: 8 lbs.,
150W & 200W: 13.5 lbs.
Natatorium rated (optional)

MATERIALS

Heat sink housing: Anodized aluminum
LED Shield: Lexan
(options: clear & frosted)
Finish: Powder coated (standard colors: black & white)
Dropped acrylic lens (optional)

OCCUPANCY SENSOR

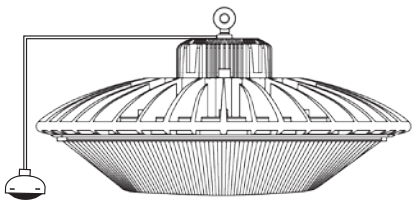

CABLE MOUNT 70W & 90W DIMENSIONS

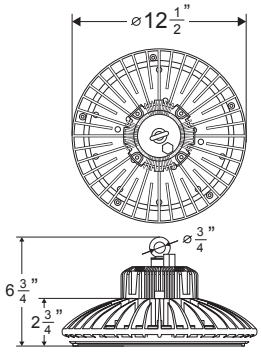

CABLE MOUNT 150W & 200W DIMENSIONS

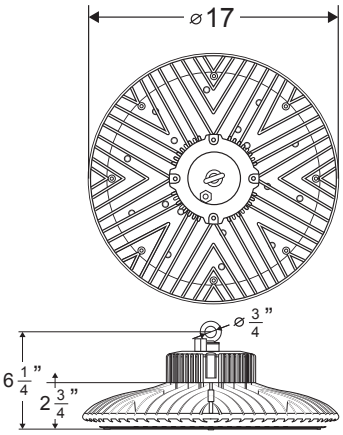

PHOTOMETRICS

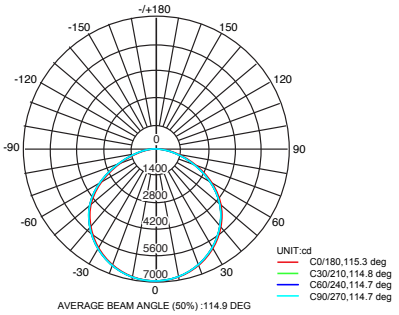

140°F OPERATING TEMPERATURE SURFACE MOUNT CONFIGURATION

70W & 90W DIMENSIONS

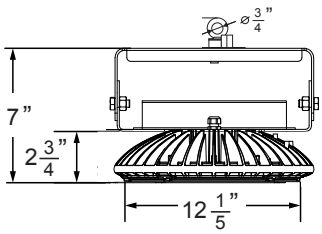

150W & 200W DIMENSIONS

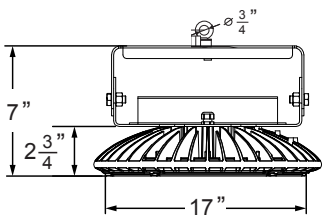

480V SURFACE MOUNT CONFIGURATION

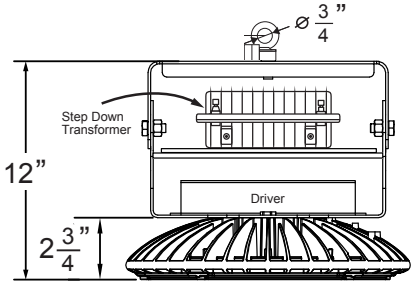

HBF WITH OPTIONAL DROPPED ACRYLIC LENS

CABLE MOUNT (CM)
(SHOWN: 120-277V)

PENDANT MOUNT (PM)
(SHOWN: 120-277V)

70W & 90W DIMENSIONS

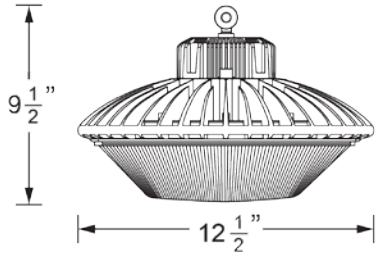

70W & 90W DIMENSIONS

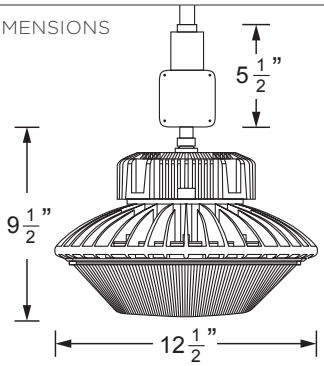

150W & 200W DIMENSIONS

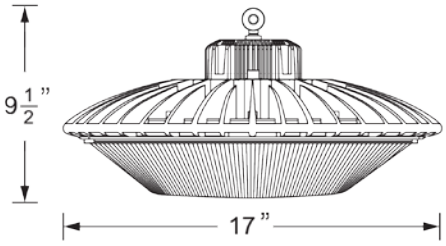

150W & 200W DIMENSIONS

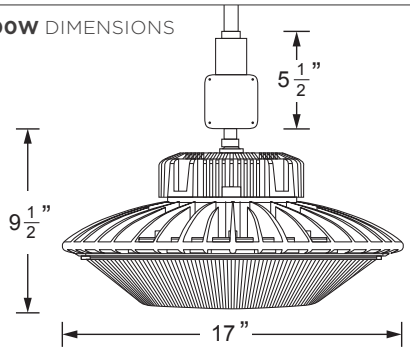

PRODUCT SPECIFICATIONS

COLOR TEMPERATURES DELIVERED LUMENS (WITHOUT LENS*)

* FOR LUMENS WITH LENS, SEE OUR WEBSITE

SERIES	WATTS	MOUNT		BEAM	WW 3500K	NW 4100K	CW 5000K	INPUT VOLT.	FINISH		OPTIONS/ACCESSORIES		LENS	
HBF	70W	CM	CABLE (STD)	150°	9842 lm	10300 lm	10360 lm	90-305V (STD)	BL	BLACK (STD)	OS	OCCUPANCY SENSOR	DL	DROPPED ACRYLIC LENS
	90W	PM	PENDANT		12021 lm	12654 lm	13320 lm		WH	WHITE (STD)	WG	WIRE GUARD		
	150W	SM	SURFACE MOUNT		21310 lm	22431 lm	23612 lm	347-480V (OPT)	RAL	OPTIONAL FINISH	NAT	NATATORIUM	CL	CLEAR LENS
	200W				26780 lm	28190 lm	29674 lm				DIM	0-10V DIMMING	FL	FROSTED LENS
									NAT	NATATORIUM FINISH (OPT)	HTD	140° OPERATING TEMPERATURE		

WW = WARM WHITE **NW** = NATURAL WHITE **CW** = COOL WHITE **REVIT & IES FILES** are located at www.SpecGradeLED.com

DUE TO CONTINUOUS IMPROVEMENT AND INNOVATION, PRODUCT APPEARANCE AND SPECIFICATIONS MAY CHANGE WITHOUT NOTICE. ACTUAL PERFORMANCE MAY DIFFER AS A RESULT OF END-USER ENVIRONMENT AND APPLICATION.

PRODUCT CERTIFICATIONS, WARRANTIES & APPROVALS

DLC · A+ RECALL PRODUCT INSURANCE · IP65 · ETL LISTED · DRIVER 5YEAR WARRANTY · LED 10YEAR WARRANTY · LM79 · LM80 · DIMMABLE 0-10V · REVIT (BIM) Files available

SPECIFICATIONS

HBEAM 2

HB2 | Suspended, Wall

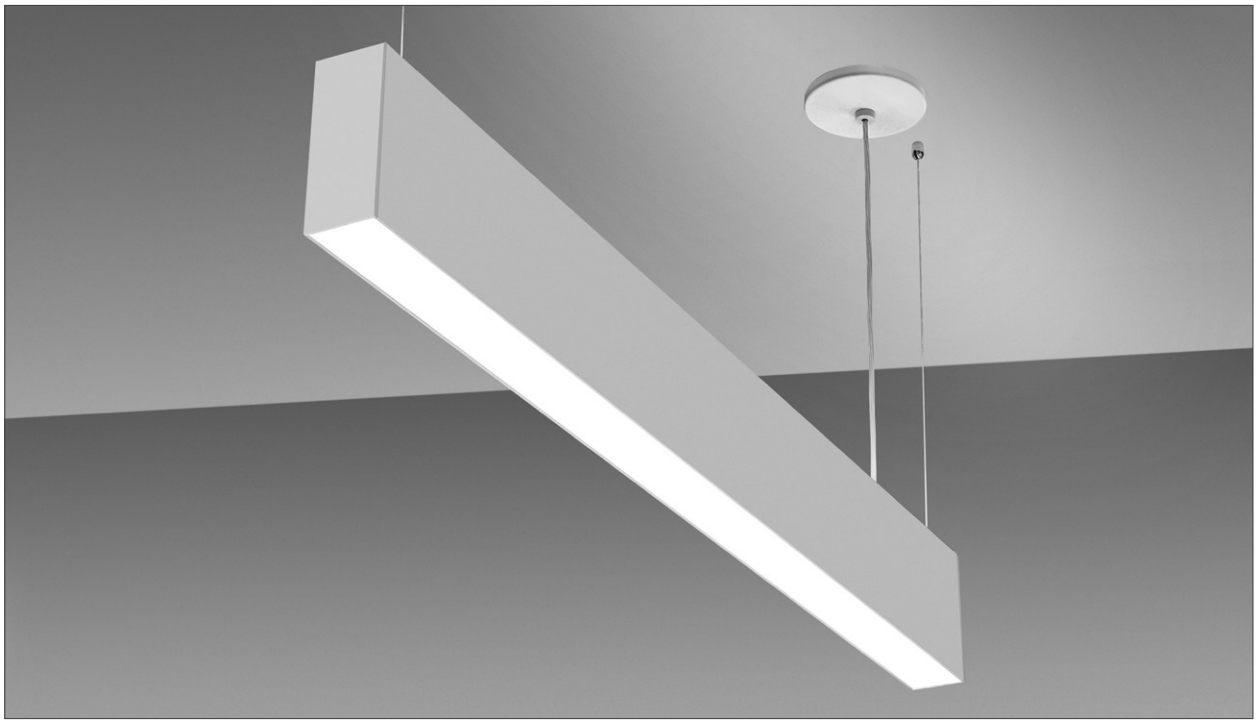

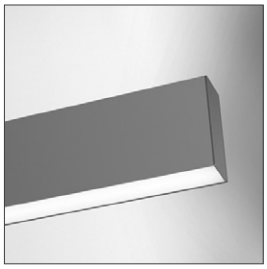

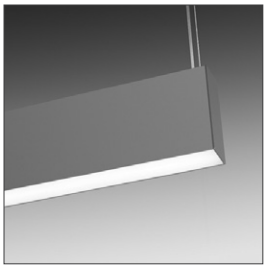

ALW
ARCHITECTURAL LIGHTING WORKS

Find additional images and information at
alwusa.com/hb2

HBEAM 2 – HB2

Suspended, Wall

Type:

1. BASE MODEL

HB2S	2" suspended, direct/indirect
HB2W[1]	2" wall-mount, direct/indirect

[1]*Includes optional 1/4" stand-off bracket(s) for alternative mounting option in the field*

2. RUN LENGTH/ SIZE

___	Individual (2', 3', 4', 5', 6', 7' or 8')
___	Continuous row or Configuration[2] *(enter total linear length, ex: 20')*

[2]*A configuration is a custom shape (rectangle square, L, etc.) with mitered corners. Must choose quantity of mitered corners in Additional Options.*

All lengths are nominal and may vary based on lamping and other specfication selections. Consult factory when exact lengths are required.

3. LAMPING – PRIMARY/ DIRECT

NONE	None. *Select when specifying only Indirect Lamping or Accent Downlight*
LED[3]	*Pair lamping with CCT (where applicable), ex: MED/2700K*
LOW[4]	Low-output, high-performance LED – 451 delivered lm/ft, 7.3 W/lf, 62 lm/W **2700K 3000K 3500K 4000K**
MED	Medium-output, high performance LED – 601 delivered lm/ft, 9.7 W/lf, 62 lm/W **2700K 3000K 3500K 4000K**
HI[4]	High-output, high-performance LED – 751 delivered lm/ft, 12.1 W/lf, 62 lm/W **2700K 3000K 3500K 4000K**
TUNE[5]	Tunable white LED, 2700K-5700K – 501 delivered lumens, 8.1 W/lf, 62 lm/W *(must select DMX driver below; controller not included)*
DECOR[4]	Decorative constant voltage LED, 220 delivered lm/ft, 5.9 W/lf, 37 lm/W **3000K 3500K 4000K**
RGB	Color-changing RGB LED, 5 W/lf *(must select DMX driver below; controller not included)*

[3]*LED board options may be limited and/or subsituted to accomodate requests for exact, non-standard overall run lengths (ex: 3' 9"). Consult factory.*

[4]*Performance calculations are extrapolated estimates based on the actual IES test results of MED option at 3500K with an EXT/F lens*

[5]*Performance calculations are extrapolated MAXIMUM estimates for mid-range CCTs based on the actual IES test results of MED option at 3500K with an EXT/F lens. Cooler and warmer CCT settings will provide lower delivered lumens, lower lm/W and higher W/lf.*

FLUORESCENT *Lamps not provided*

1T5	Standard output, 1-lamp profile T5
1T5HO	High output, 1-lamp profile T5
1T5S	Standard output, 1-lamp profile T5, staggered
1T5HOS	High output, 1-lamp profile T5, staggered

© 2016 Architectural Lighting Works. Specifications subject to change without notice. Limited warranty. Complete terms available on website.

A 1035 22nd Avenue, Unit 1 · Oakland, CA 94606 P 510.489.2530 E TalkToUs@alwusa.com W alwusa.com

HBEAM 2 – HB2

Suspended, Wall

4. DRIVER – PRIMARY/ DIRECT

NONE	None. *Select when specifying <u>only</u> Indirect Lamping or Accent Downlight*
LED	
0/10V/	0-10V dimming *(Pair driver with dimming % below, ex: 0/10V/10%* **10%** Standard dimming to 10% **1%** Dimming to 1% **0%** Premium dimming to 0%
DALI	DALI dimming to 0%
DMX	DMX dimming to 0%
HILUME/A3	Lutron Hi-Lume® A L3D EcoSystem® or three-wire control, dimming to 1%
FLUORESCENT	
STD	Standard, non-dimming, <10% THD
FL/0/10V	Dimming, 0-10V
HILUME	Lutron Hi-Lume® dimming
BALLASTAR	Step-dimming

Driver/ballast options may be limited with 347 voltage. Consult factory.
Driver/ballast specifications provided upon request to assist with control system integration
Consult ballast manufacturer for lamp compatibility

5. LENS– PRIMARY/ DIRECT

NONE	None. *Select when specifying <u>only</u> Indirect Lamping or Accent Downlight*
EXT/F	Extra diffuse, flush

© 2016 Architectural Lighting Works. Specifications subject to change without notice. Limited warranty. Complete terms available on website.

A 1035 22nd Avenue, Unit 1 · Oakland, CA 94606 P 510.489.2530 E TalkToUs@alwusa.com W alwusa.com

HBEAM 2 – HB2

Suspended, Wall

6. LAMPING – PRIMARY/ INDIRECT

NONE None. *Select when specifying only Direct Lamping or Accent Downlight*

LED[6] *Pair lamping with CCT (where applicable), ex: MED/2700K*

LOW[7] Low-output, high-performance LED – 557 delivered lm/ft, 7.3 W/lf, 76 lm/W
2700K 3000K 3500K 4000K

MED Medium-output, high performance LED – 743 delivered lm/ft, 9.7 W/lf, 76 lm/W
2700K 3000K 3500K 4000K

HI[7] High-output, high-performance LED – 929 delivered lm/ft, 12.1 W/lf, 76 lm/W
2700K 3000K 3500K 4000K

TUNE[8] Tunable white LED, 2700K-5700K – 619 delivered lumens, 8.1 W/lf, 76 lm/W
(must select DMX driver below; controller not included)

DECOR[7] Decorative constant voltage LED, 272 delivered lm/ft, 5.9 W/lf, 46 lm/W
3000K 3500K 4000K

RGB Color-changing RGB LED, 5 W/lf
(must select DMX driver below; controller not included)

[6]*LED board options may be limited and/or subsituted to accomodate requests for exact, non-standard overall run lengths (ex: 3' 9"). Consult factory.*

[7]*Performance calculations are extrapolated estimates based on the actual IES test results of MED option at 3500K with a WD lens*

[8]*Performance calculations are extrapolated MAXIMUM estimates for mid-range CCTs based on the actual IES test results of MED option at 3500K a WD lens. Cooler and warmer CCT settings will provide lower delivered lumens, lower lm/W and higher W/lf.*

FLUORESCENT *Lamps not provided*

1T5 Standard output, 1-lamp profile T5
1T5HO High output, 1-lamp profile T5
1T5S Standard output, 1-lamp profile T5, staggered
1T5HOS High output, 1-lamp profile T5, staggered

7. DRIVER – INDIRECT

NONE None. *Select when specifying only Direct Lamping or Accent Downlight*

LED

0/10V/ 0-10V dimming *(Pair driver with dimming % below, ex: 0/10V/10%*
10% Standard dimming to 10% **1%** Dimming to 1% **0%** Premium dimming to 0%

DALI DALI dimming to 0%
DMX DMX dimming to 0%
HILUME/A3 Lutron Hi-Lume® A L3D EcoSystem® or three-wire control, dimming to 1%

FLUORESCENT

STD Standard, non-dimming, <10% THD
FL/0/10V Dimming, 0-10V
HILUME Lutron Hi-Lume® dimming
BALLASTAR Step-dimming

Driver/ballast options may be limited with 347 voltage. Consult factory.
Driver/ballast specifications provided upon request to assist with control system integration
Consult ballast manufacturer for lamp compatibility

© 2016 Architectural Lighting Works. Specifications subject to change without notice. Limited warranty. Complete terms available on website.

A 1035 22nd Avenue, Unit 1 · Oakland, CA 94606 P 510.489.2530 E TalkToUs@alwusa.com W alwusa.com

HBEAM 2 – HB2
Suspended, Wall

8. LENS – INDIRECT

NONE	None. *Select when specifying <u>only</u> Direct Lamping or Accent Downlight*
WD	Frosted *(LEDs may be visible when dimmed)*
EXT/F	Extra diffuse, flush

9. FINISH

AL	Standard, natural "Ultimatte" aluminum
BK	Black powdercoat
WH	White powdercoat
RAL/ ___	Specify RAL powdercoat code *(ex: #RAL/3003)*

10. VOLTAGE

120[9]	120 volt
277[10]	277 volt
UNV	Universal voltage
347[11]	347 volt

[9]*For MR16/LED dimming, consult LED retrofit lamp manufacturer for voltage dimmer compatibility*
[10]*Dimming with 277 volt not recommended for LED retrofit lamps.*
[11]*Driver/ballast options may be limited with 347 voltage. Consult factory.*

11. ADDITIONAL OPTIONS

NONE	None
COMBO	Combination 4.5" canopies at feed locations with both power feed and suspension mounting hardware
EMC/___[12]	Emergency circuit *(indicate total quantity, ex: EMC/4)*
EMB/___[12]	Emergency battery pack *(indicate total quantity, ex: EMB/4)*
ENLGHT/__[13,14,15]	Enlighted® embedded smart sensor *(occupancy, daylight, networking and more)*
OS/___[15]	0-10V remoted occupancy sensor *(indicate total quantity, ex: OS/4)*
PH___[15]	0-10V remoted photocell/daylight sensor *(indicate total quantity, ex: PH/4)*
MC/___	Mitered corners *(indicate total quantity, ex: MC/4 for a rectangle)*
SB	Seismic bracing

[12]*Consult factory for available options*
[13]*Enlighted Gateway <u>and</u> Energy Manager (by others) plus programming required.*
[14]*Compatible with 0-10V driver only. Contact factory for alternative options.*
[15]*Select quantity of 1 for every 8 ft. (ex:ENLGHT3 for a 24' fixture run; OS4 for a 32' fixture run) Learn more at enlightedinc.com.*

LED LAMP PAIRING OPTIONS

		Indirect			
		NONE	*LOW*	*MED*	*HI*
Direct	*NONE*	×	✓	✓	✓
	LOW	✓	✓	✓	✓
	MED	✓	✓	✓	✓
	HI	✓	✓	✓	×

Limitations exist due to heat. Please follow above guidelines when specifying.

© 2016 Architectural Lighting Works. Specifications subject to change without notice. Limited warranty. Complete terms available on website.

A 1035 22nd Avenue, Unit 1 · Oakland, CA 94606 P 510.489.2530 E TalkToUs@alwusa.com W alwusa.com

HBEAM 2 – HB2
Suspended, Wall

DIMENSIONS

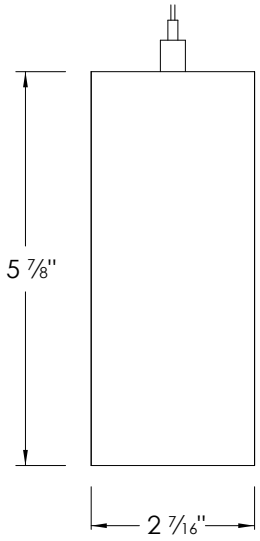

HB2S
EXT/F

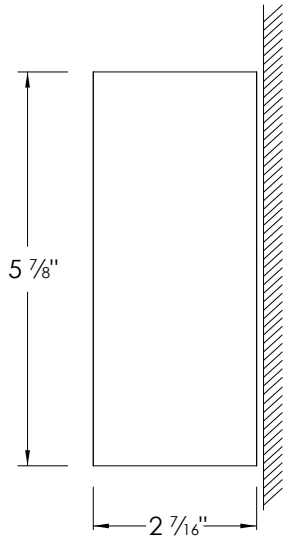

HB2W

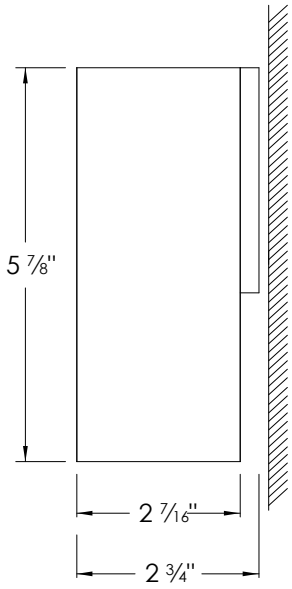

HB2W
Shown with included,
optional 1/4" stand-off bracket

© 2016 Architectural Lighting Works. Specifications subject to change without notice. Limited warranty. Complete terms available on website.

HBEAM 2 – HB2

Suspended, Wall

HOUSING

100% recyclable, extruded architectural grade T6061 aluminum with .08" minimum wall thickness.

ELECTRICAL

Fluorescent ballasts are <10% THD Class P. Programmed-start standard. LED drivers are Class 2. L_{80} >50,000 hours. 80+ CRI. ETL listed for damp location with lens.

EMERGENCY

Luminaires can be wired for emergency circuit and/or emergency battery backup. Consult factory for details.

SUSPENSION HARDWARE

CEILING HARDWARE

(1) 4.5" canopy per power feed location, (1) bullet mount, (1) 8' aircraft cable and (1) 2" canopy (for use with T-bar mounting) per suspension point

COMBO CANOPY

Choose option COMBO to specfiy 4.5" canopies at feed locations with power feed and aircraft cable suspension mounting

Canopy finish is always white. Contact factory for alternate color.

OPTIONS

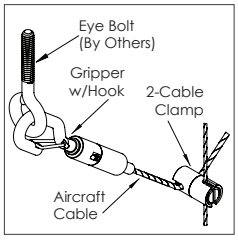

SEISMIC BRACING

Add-on hardward includes cable gripper with hook, 2-cable clamp and specified length of aircraft cable per suspension point

MITERED CORNERS

Consult factory for mitered corner angle options

LINEAR LENS OPTIONS

Extruded, twin-layered, high-impact acrylic. EXT is white and extra diffuse with minimal-to-no source visibility. WD is lightly frosted with greater light output, but possible source visibility.

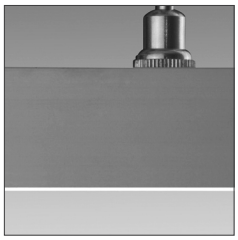

FLUSH LENS – EXT/F, WD

FINISH

Standard finish is "Ultimatte" aluminum — a smooth, clean and durable finish achieved from a deep-etch and two-step clear anodizing process. White, black and color RAL powdercoat options also available.

ALUMINUM – AL

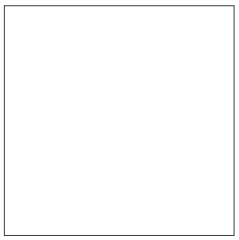

WHITE – WH

BLACK – BK

COLOR – RAL

© 2016 Architectural Lighting Works. Specifications subject to change without notice. Limited warranty. Complete terms available on website.

A 1035 22nd Avenue, Unit 1 · Oakland, CA 94606 P 510.489.2530 E TalkToUs@alwusa.com W alwusa.com

Neo-Ray

DESCRIPTION

The Define series by Neo-Ray characterizes the ultimate in minimalist simplicity by providing clean, uniform lines of illumination in virtually any architectural environment. Powered by Eaton's most advanced linear LED technology, the Define series delivers outstanding efficacy in a variety of profile widths. 1″, 2″, 3″, 4″ and 5″ luminaire widths are all specifiable to the nearest inch in length and can be fitted with standard flush, regress and drop lensing. In wall corners and wall to ceiling transitions can all be ordered as standard components and blend seamlessly into the most complex architectural spaces. Custom transitions are also available. Robust construction and adaptable, modular components make installation simple and ensure laser straight runs.

Catalog #		Type
Project		
Comments		Date
Prepared by		

SPECIFICATION FEATURES

Construction
Housing trim extruded from 6063 aluminum. Nominal 2′ -12′ illuminated sections. Used in run configuration and/or individual fixtures. All components are RoHs compliant.

Lens
Snap in lens available in flush and drop lens profiles. End brackets include closure to prevent moisture and insect ingress.

Finish
Fixture housing trims are high reflectance white using electrostatically applied polyester powder coat paint.

Mounting
Recessed.

Electrical
Long-life LED system coupled with electrical driver to deliver optimal performance. LED's are available in 2700K, 3000K, 3500K or 4000K with a typical CRI ≤ 85. Projected life is 131,000 hours at L70. Electronic drivers are available for 120-277V applications. Fixtures and electrical components certified to UL and CUL standards. Fixtures are damp location listed and IC rated. For Chicago plenum, specify CP in fixture options.

Controls
Equipped standard with a 0-10V continuous dimming driver compatible with most standard dimming devices (refer to website for specific compatibility reference). Combine with FifthLight DALI and other energy saving products like sensors, daylighting controls and building management systems to maximize energy savings.

Warranty
Five year warranty.

DEFINE 2

LED

Recessed
Direct

cULus – 1598
Damp Location Listed
LM79/LM80 Compliant
ROHS Compliant

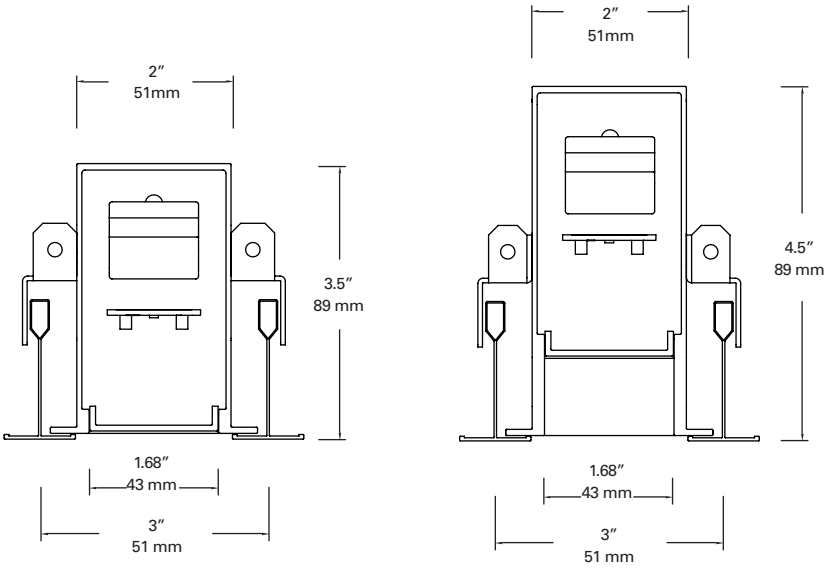

powered by fifthlight technology

ORDERING INFORMATION

Sample Number: S122-DR-2-35-ETG-0048-1-U-DD-1-W

Series	Light Distribution	Light Level[1]	Color Temperature	Celing Type[2]	Length[3]
S122 = Define 2	**DR** = Direct Recessed	**LO** = Light Level LO (1580 Lms @ 20 W) (395 Lumens per ft @ 5 W)	**27** = LED 2700K	**ETG** = 15/16″ T-Grid	**0024** = 2′ Individual[4]
QS-S122 = Define 2 Quick Ship	**RDR** = Regressed Direct Recessed	**1** = Light Level 1 (2219 Lms @ 28 W) (554 Lumens per ft @ 7 W)	**30** = LED 3000K	**FTG** = 9/16″ T-Grid	**0036** = 3′ Individual[4]
		2 = Light Level 2 (3152 Lms @ 45 W) (787 Lumens per ft @ 11.3 W)	**35** = LED 3500K	**STG** = 9/16″ Slot T-Grid	**0048** = 4′ Individual
			40 = LED 4000K	**ETT** = 15/16″ Tegular T-Grid	**0072** = 6′ Individual
				FTT = 9/16″ Tegular T-Grid	**0096** = 8′ Individual
				GYP = Gypsum board	**0144** = 12′ Individual
				FSR = "Flangeless" Gypsum Board	**XXXX** = Configurable Run[5]
				FES = "Finished" Extruded Side	

Circuiting	Voltage	Remote LED Driver	Emergency Options	Options[9]	Shielding	Color
1 = Single Circuit	**1** = 120V	**ED** = Non-Dimming	**B** = Battery Pack[8]	**CP** = Chicago Plenum	**1** = Satin Flush Diffuser	**W** = Matte White
2 = Dual Circuit	**2** = 277V	**DD** = 0-10 Volt Dimming	**E** = Emergency	**SV** = Integrated Sensor	**4** = Satin Drop Diffuser	**S** = Silver
	U = Universal (120V-277V)	**5L** = DALI Dimming[7]	**T** = Transfer Switch	**CR** = Corner		**B** = Black
	3 = 347V[6]					**C** = Custom Color

Grey bar denotes available Quick ship options.

All data certified to LM-79 standards in a NAVLAB approved testing facility

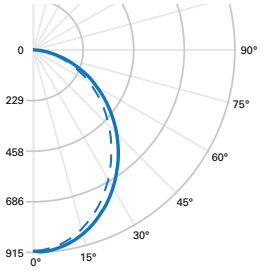

FILE NAME: S122-DR-1-35-ETG-0048-1-U-DD-1-W
CCT: 3500K
LUMENS: 2219 Lms
WATTS: 28 W
LPW: 79 LPW
TEST NUMBER: P33909

ZONAL LUMENS SUMMARY

Zone	Lumens	% Fixture
0°-30°	672	30
0°-40°	1071	48
0°-60°	1802	81
0°-90°	2219	100

LUMINANCE DATA (CD/M²)

Vertical Angle	0°	45°	90°
45°	12227	11566	11064
55°	11277	10602	10068
65°	10344	9504	8855
75°	8725	7853	7292
85°	6108	5367	4812

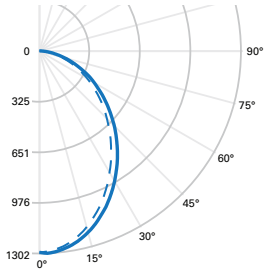

FILE NAME: S122-DR-2-35-ETG-0048-1-U-DD-1-W
CCT: 3500K
LUMENS: 3151 Lms
WATTS: 45 W
LPW: 70 LPW
TEST NUMBER: P33922

ZONAL LUMENS SUMMARY

Zone	Lumens	% Fixture
0°-30°	952	30
0°-40°	1517	48
0°-60°	2556	81
0°-90°	3151	100

LUMINANCE DATA (CD/M²)

Vertical Angle	0°	45°	90°
45°	17337	16402	15786
55°	16030	15074	14343
65°	14542	13550	12710
75°	12278	11218	10408
85°	8514	7588	7218

LUMEN MAINTENANCE

Ambient Temperature	TM-21 Lumen Maintenance (100,000 hours)	Theoretical L70 (Hours)
25°C	84.29%	131,000

MOUNTING

Extruded Trim Flange Details - Refer to submittal drawings for detailed flange information - for additional options consult factory.

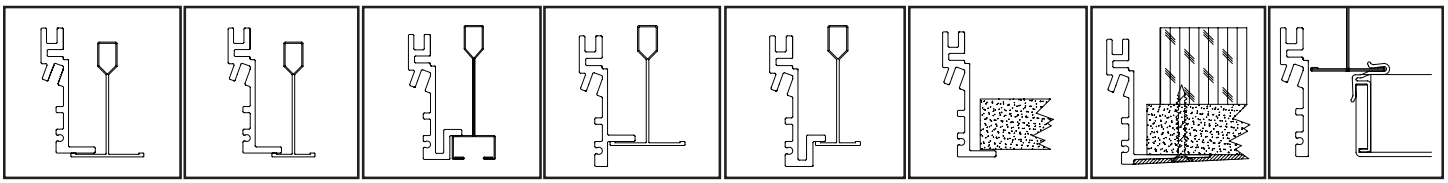

ETG 15/16" T-Grid | FTG 9/16" T-Grid | STG Slotted T-Grid | ETT 15/16" Tegular T-Grid | FTT 9/16" Tegular T-Grid | GYP Gypsum Board | FSR "Flangeless" Gypsum Board | FES Finished Extruded Side

MOUNTING *continued*

Mounting Information - Refer to installation instructions for detailed mounting information

2ft Individual (0024)

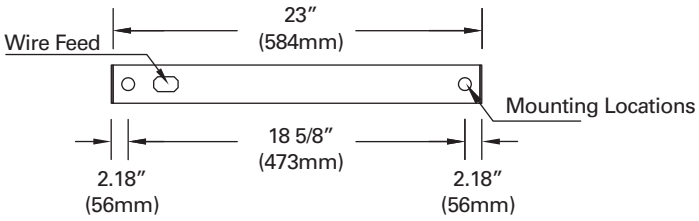

8ft Individual (0096)

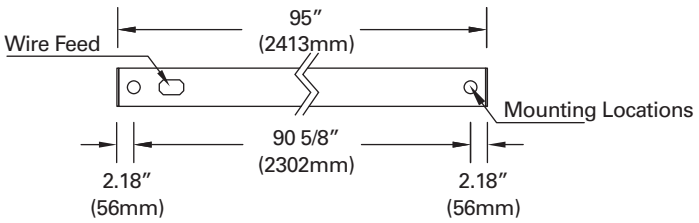

4ft Individual (0048)

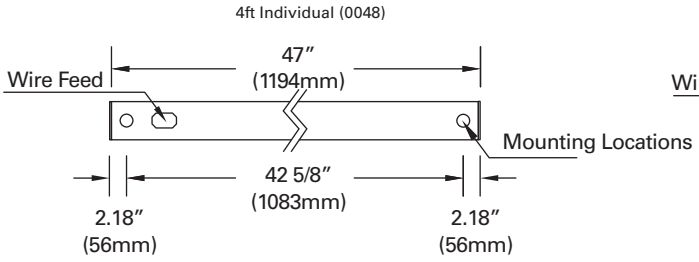

12ft Individual (0144)

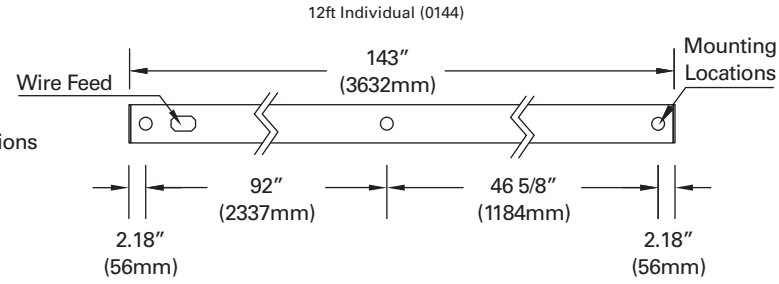

LENS DETAIL

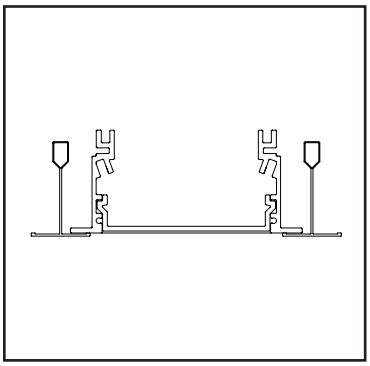

Flush Satin Lens

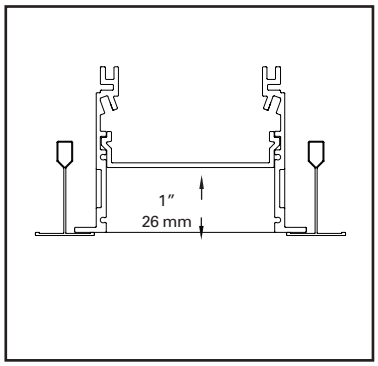

Regressed Satin Lens

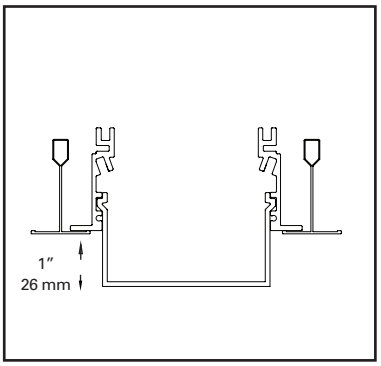

Satin Drop Down Lens

CORNER TRANSITIONS

Consult factory for precise corner locations and for ordering.

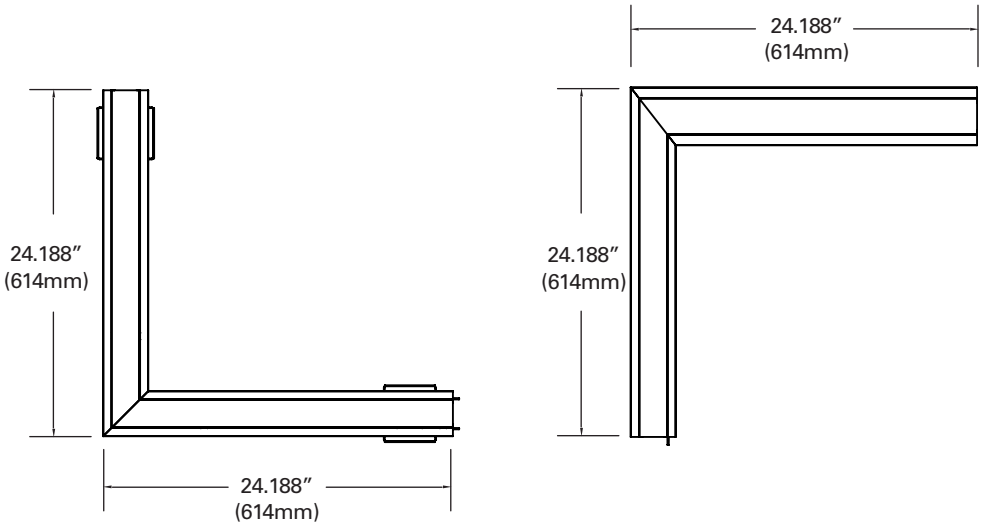

ALL GRIDTYPES SHOWN

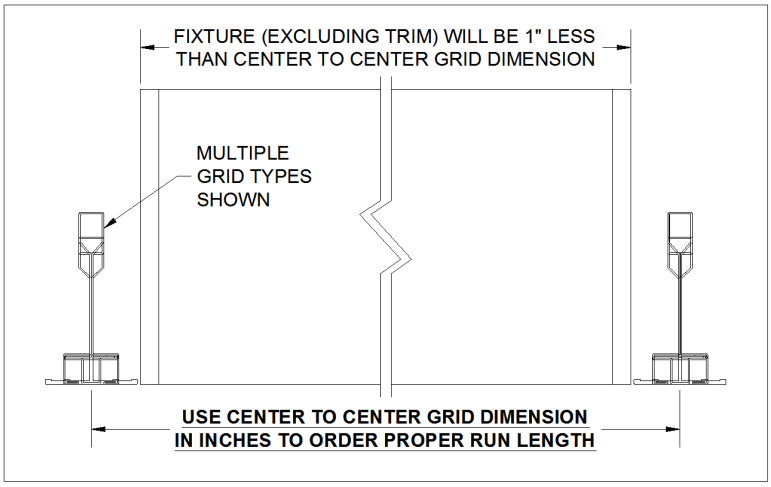

FSR: "FLANGELESS" GYPSUM BOARD

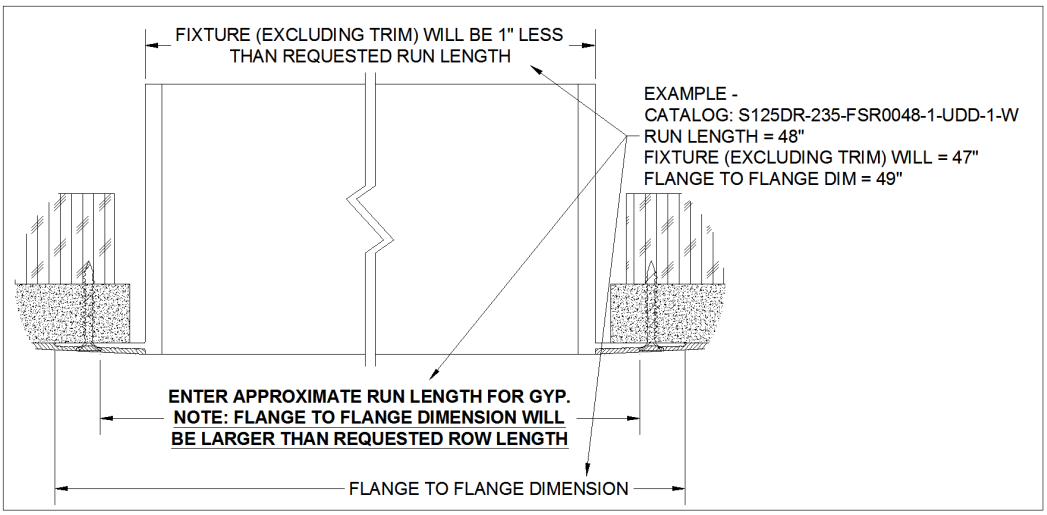

GYP: GYPSUM BOARD

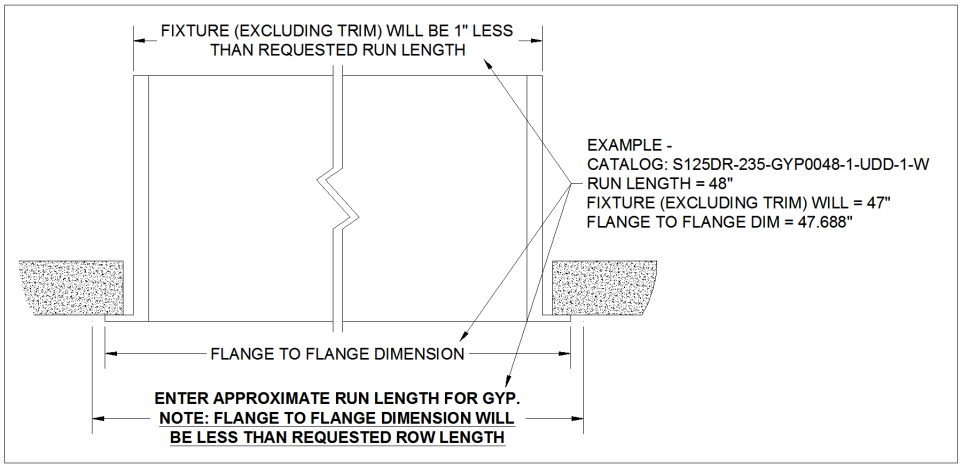

FES: “Finished” Extruded Sides

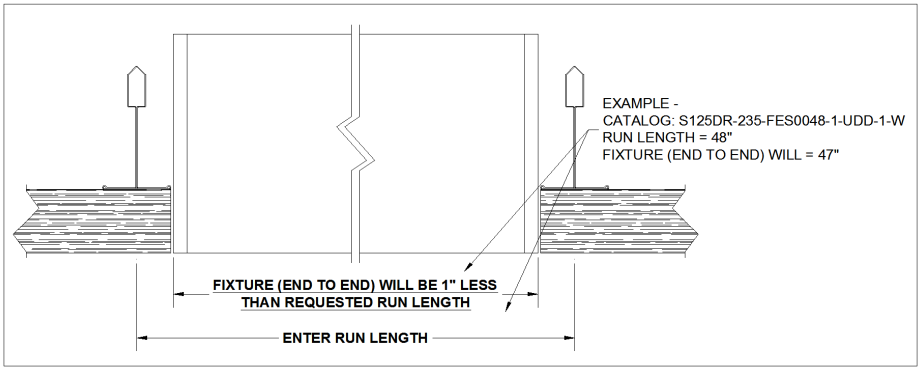

TECHNICAL NOTES

1. Additional lower light levels available. Please consult factory for specific details.
2. Not all ceiling types are shown; consult factory for specific ceiling types not listed.
3. All lengths are nominal. Actual sizes are one inch shorter than nominal to allow easy in-grid installation. For Gypsum or Flangeless installations add 1 inch to overall fixture length. Refer to submittal drawings for actual sizes. See “Mounting” details for example.
4. Not all dimming options available for every length; please consult factory for specific details.
5. For configurable runs specify length to nearest inch. Standard runs ship in 12ft increments. Ensure to specify 8ft increments if 12ft are too large to receive. Additional charges may apply; please consult factory for details.
6. 347V is achieved using remote transformer.
7. FifthLight DALI is achieved using digital analog converter.
8. Battery pack options are not available in every length; please consult factory for specific details. Battery pack is remote installation only.
9. For all options; consult factory for specific requirements.

Neo-Ray

DESCRIPTION

The Define series by Neo-Ray characterizes the ultimate in minimalist simplicity by providing clean, uniform lines of illumination in virtually any architectural environment. Powered by Eaton's most advanced linear LED technology, the Define series delivers outstanding efficacy in a variety of profile widths. 1″, 2″, 3″, 4″ and 5″ luminaire widths are all specifiable to the nearest inch in length and can be fitted with standard flush, regress and drop lensing. In wall corners and wall to ceiling transitions can all be ordered as standard components and blend seamlessly into the most complex architectural spaces. Custom transitions are also available. Robust construction and adaptable, modular components make installation simple and ensure laser straight runs.

Catalog #		Type
Project		
Comments		Date
Prepared by		

SPECIFICATION FEATURES

Construction
Housing trim extruded from 6063 aluminum. Nominal 2′ -12′ illuminated sections. Used in run configuration and/or individual fixtures. All components are RoHs compliant.

Lens
Snap in lens available in flush and drop lens profiles. End brackets include closure to prevent moisture and insect ingress.

Finish
Fixture housing trims are high reflectance white using electrostatically applied polyester powder coat paint.

Mounting
Recessed.

Electrical
Long-life LED system coupled with electrical driver to deliver optimal performance. LED's are available in 2700K, 3000K, 3500K or 4000K with a typical CRI ≤ 85. Projected life is 131,000 hours at L70. Electronic drivers are available for 120-277V applications. Fixtures and electrical components certified to UL and CUL standards. Fixtures are damp location listed and IC rated. For Chicago plenum, specify CP in fixture options.

Controls
Equipped standard with a 0-10V continuous dimming driver compatible with most standard dimming devices (refer to website for specific compatibility reference). Combine with FifthLight DALI and other energy saving products like sensors, daylighting controls and building management systems to maximize energy savings.

Warranty
Five year warranty.

DEFINE 2

LED

Recessed
Direct

cULus – 1598
Damp Location Listed
LM79/LM80 Compliant
ROHS Compliant

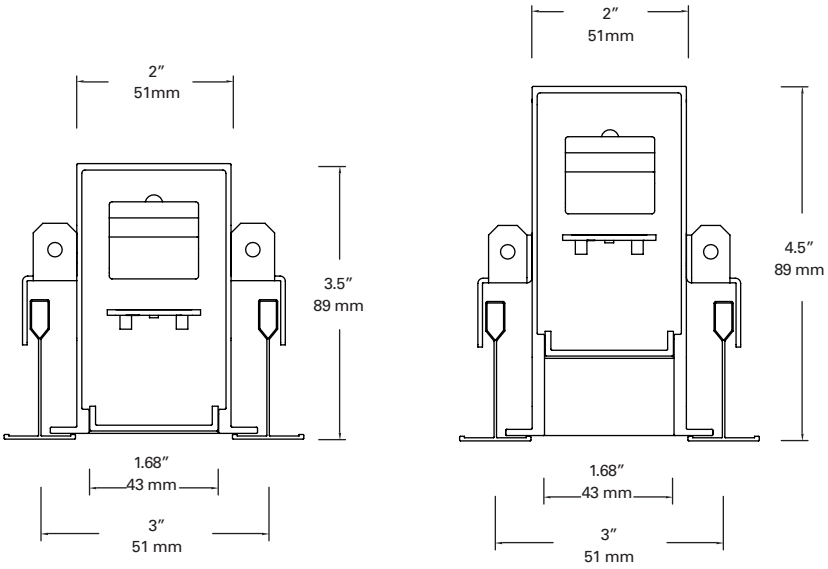

powered by fifthlight technology

ORDERING INFORMATION

Sample Number: S122-DR-2-35-ETG-0048-1-U-DD-1-W

Series	Light Distribution	Light Level[1]	Color Temperature	Celing Type[2]	Length[3]
S122 = Define 2	**DR** = Direct Recessed	**LO** = Light Level LO (1580 Lms @ 20 W) (395 Lumens per ft @ 5 W)	**27** = LED 2700K	**ETG** = 15/16″ T-Grid	**0024** = 2′ Individual[4]
QS-S122 = Define 2 Quick Ship	**RDR** = Regressed Direct Recessed	**1** = Light Level 1 (2219 Lms @ 28 W) (554 Lumens per ft @ 7 W)	**30** = LED 3000K	**FTG** = 9/16″ T-Grid	**0036** = 3′ Individual[4]
		2 = Light Level 2 (3152 Lms @ 45 W) (787 Lumens per ft @ 11.3 W)	**35** = LED 3500K	**STG** = 9/16″ Slot T-Grid	**0048** = 4′ Individual
			40 = LED 4000K	**ETT** = 15/16″ Tegular T-Grid	**0072** = 6′ Individual
				FTT = 9/16″ Tegular T-Grid	**0096** = 8′ Individual
				GYP = Gypsum board	**0144** = 12′ Individual
				FSR = "Flangeless" Gypsum Board	**XXXX** = Configurable Run[5]
				FES = "Finished" Extruded Side	

Circuiting	Voltage	Remote LED Driver	Emergency Options	Options[9]	Shielding	Color
1 = Single Circuit	**1** = 120V	**ED** = Non-Dimming	**B** = Battery Pack[8]	**CP** = Chicago Plenum	**1** = Satin Flush Diffuser	**W** = Matte White
2 = Dual Circuit	**2** = 277V	**DD** = 0-10 Volt Dimming	**E** = Emergency	**SV** = Integrated Sensor	**4** = Satin Drop Diffuser	**S** = Silver
	U = Universal (120V-277V)	**5L** = DALI Dimming[7]	**T** = Transfer Switch	**CR** = Corner		**B** = Black
	3 = 347V[6]					**C** = Custom Color

Grey bar denotes available Quick ship options.

All data certified to LM-79 standards in a NAVLAB approved testing facility

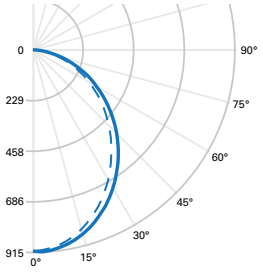

FILE NAME: S122-DR-1-35-ETG-0048-1-U-DD-1-W
CCT: 3500K
LUMENS: 2219 Lms
WATTS: 28 W
LPW: 79 LPW
TEST NUMBER: P33909

ZONAL LUMENS SUMMARY

Zone	Lumens	% Fixture
0°-30°	672	30
0°-40°	1071	48
0°-60°	1802	81
0°-90°	2219	100

LUMINANCE DATA (CD/M²)

Vertical Angle	0°	45°	90°
45°	12227	11566	11064
55°	11277	10602	10068
65°	10344	9504	8855
75°	8725	7853	7292
85°	6108	5367	4812

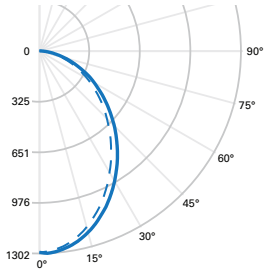

FILE NAME: S122-DR-2-35-ETG-0048-1-U-DD-1-W
CCT: 3500K
LUMENS: 3151 Lms
WATTS: 45 W
LPW: 70 LPW
TEST NUMBER: P33922

ZONAL LUMENS SUMMARY

Zone	Lumens	% Fixture
0°-30°	952	30
0°-40°	1517	48
0°-60°	2556	81
0°-90°	3151	100

LUMINANCE DATA (CD/M²)

Vertical Angle	0°	45°	90°
45°	17337	16402	15786
55°	16030	15074	14343
65°	14542	13550	12710
75°	12278	11218	10408
85°	8514	7588	7218

LUMEN MAINTENANCE

Ambient Temperature	TM-21 Lumen Maintenance (100,000 hours)	Theoretical L70 (Hours)
25°C	84.29%	131,000

MOUNTING

Extruded Trim Flange Details - Refer to submittal drawings for detailed flange information - for additional options consult factory.

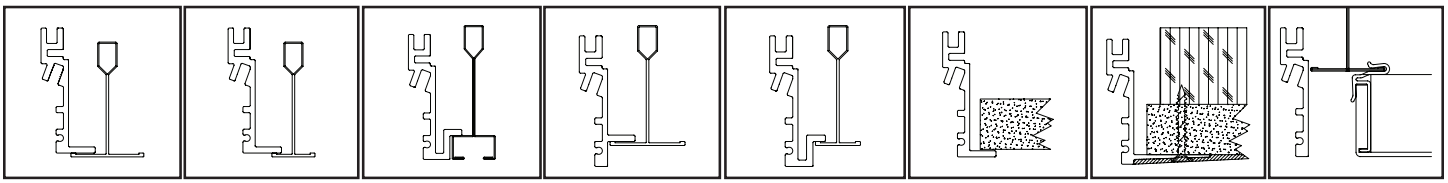

ETG 15/16" T-Grid | FTG 9/16" T-Grid | STG Slotted T-Grid | ETT 15/16" Tegular T-Grid | FTT 9/16" Tegular T-Grid | GYP Gypsum Board | FSR "Flangeless" Gypsum Board | FES Finished Extruded Side

MOUNTING *continued*

Mounting Information - Refer to installation instructions for detailed mounting information

2ft Individual (0024)

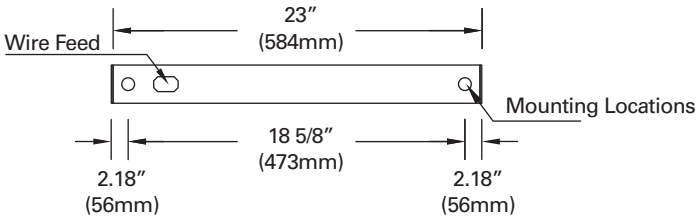

8ft Individual (0096)

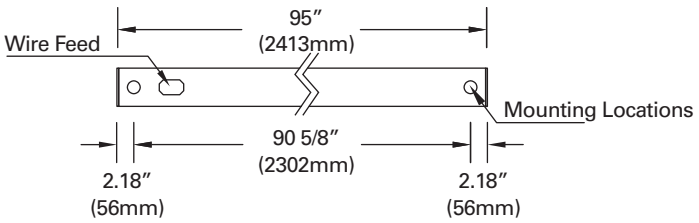

4ft Individual (0048)

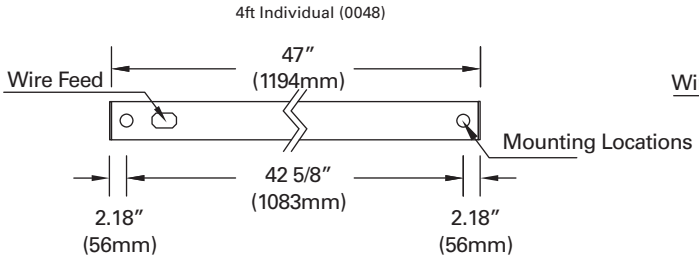

12ft Individual (0144)

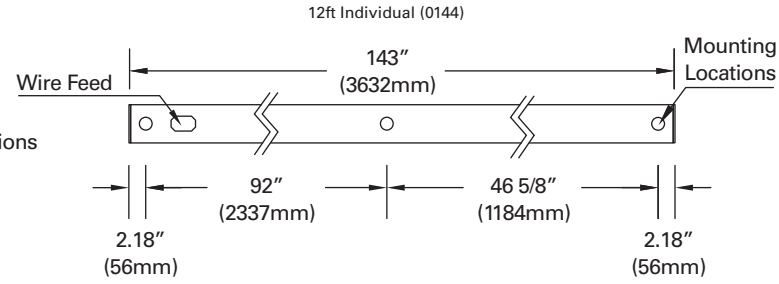

LENS DETAIL

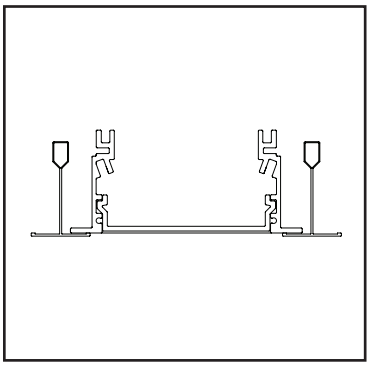

Flush Satin Lens

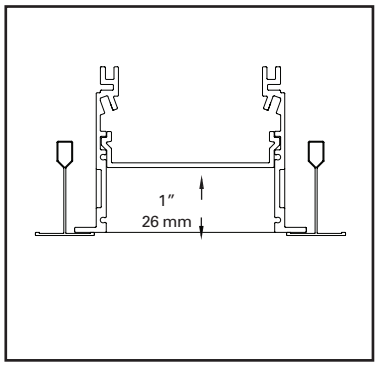

Regressed Satin Lens

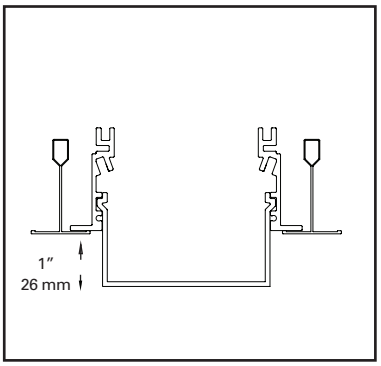

Satin Drop Down Lens

CORNER TRANSITIONS

Consult factory for precise corner locations and for ordering.

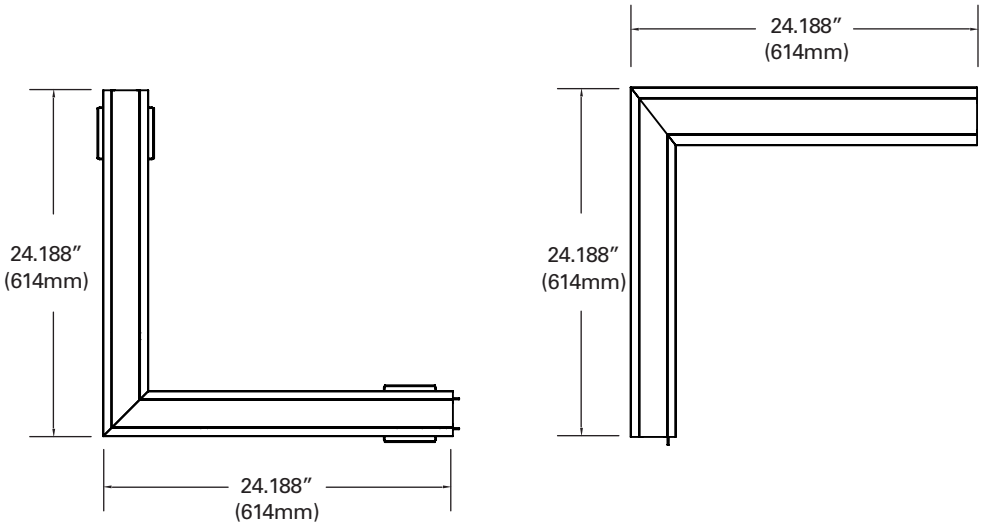

ALL GRIDTYPES SHOWN

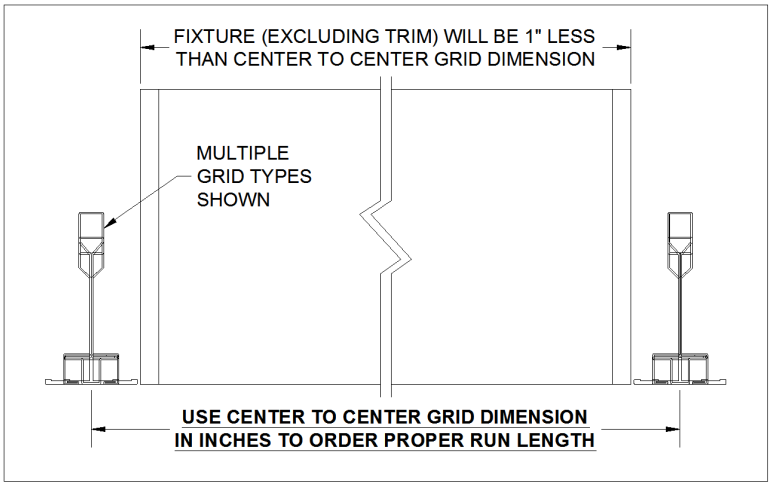

FSR: "FLANGELESS" GYPSUM BOARD

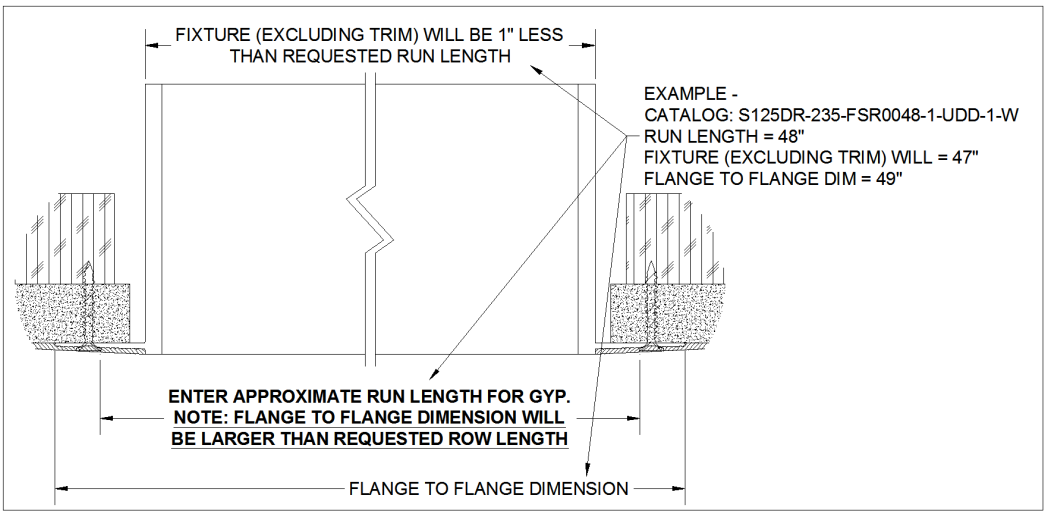

GYP: GYPSUM BOARD

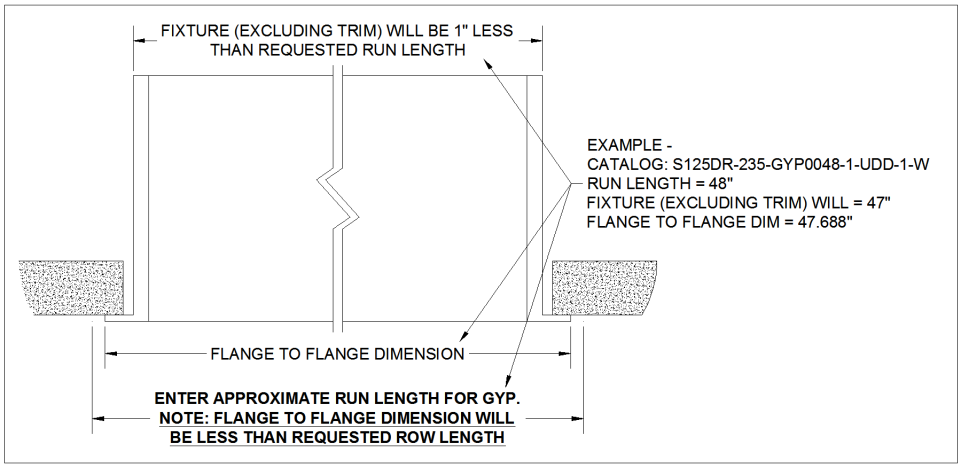

FES: “Finished” Extruded Sides

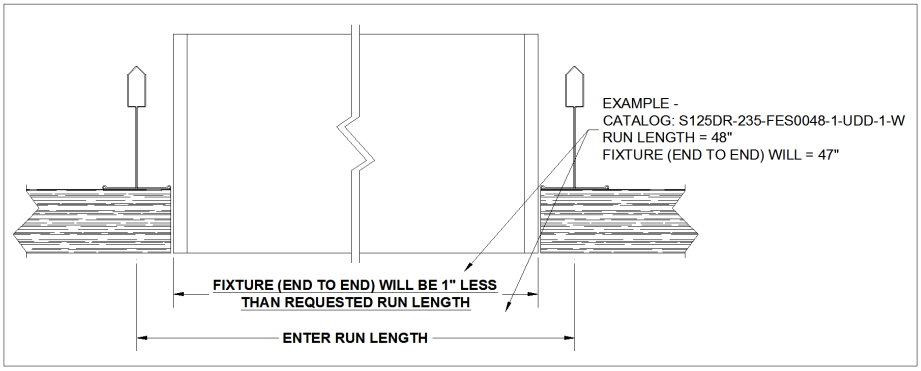

TECHNICAL NOTES

1. Additional lower light levels available. Please consult factory for specific details.
2. Not all ceiling types are shown; consult factory for specific ceiling types not listed.
3. All lengths are nominal. Actual sizes are one inch shorter than nominal to allow easy in-grid installation. For Gypsum or Flangeless installations add 1 inch to overall fixture length. Refer to submittal drawings for actual sizes. See “Mounting” details for example.
4. Not all dimming options available for every length; please consult factory for specific details.
5. For configurable runs specify length to nearest inch. Standard runs ship in 12ft increments. Ensure to specify 8ft increments if 12ft are too large to receive. Additional charges may apply; please consult factory for details.
6. 347V is achieved using remote transformer.
7. FifthLight DALI is achieved using digital analog converter.
8. Battery pack options are not available in every length; please consult factory for specific details. Battery pack is remote installation only.
9. For all options; consult factory for specific requirements.

TROFFER

contractor

Project:

Type:

Catalog number:

LED 2x4 edge lit series

recessed grid mount - optional drywall, surface & suspended

specifications | 120-277 Volt

- The 2x4 Edge Lit Troffer has a standard white extruded aluminum outer frame that secures the white diffused lens and LED chips around the perimeter of the fixture. Special order required for silver frame.
- This fixture can be installed in a 2x4 grid ceiling, with T-bars at 24" and 48" on center, and also comes standard with brackets for suspended mount with site supplied suspension materials. There are optional accessories offered for surface mount, recessed flange kit for drywall applications, and a suspension kit.
- Driver enclosure is located on the top of the fixture, and has KO holes for quick on-site wiring.

LED Panel

- Edge Lit
- 80 CRI

LED Driver

- 120V through 277V universal driver is standard. Contact factory for 347V.
- Dimmable, instant 100% light (10%-100%) via: 0-10V protocol. 5-year warranty.

Listed to UL and Canadian standards.
Damp Location.

DesignLights Consortium® Qualified. Refer to DLC website for current information designlights.org.

Specifications and dimensions subject to change without notice.

Available photometrics at atlantic-lighting.com.

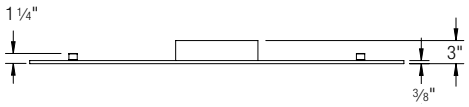

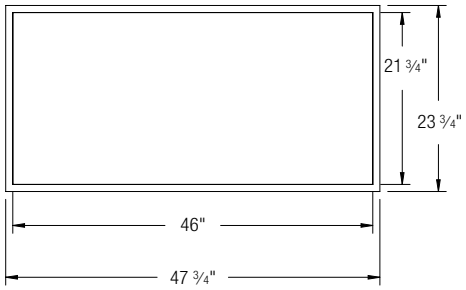

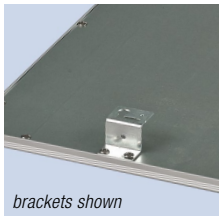
brackets shown

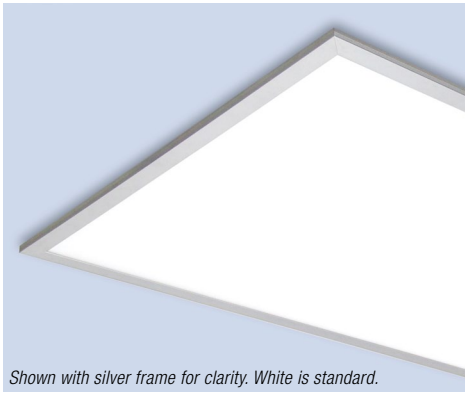
Shown with silver frame for clarity. White is standard.

ordering data

MODEL CT-EL2x4

CT-EL2x4	2'x4' LED Troffer

NOMINAL LUMENS .....

LED4400	4400 lumen/50W
LED5300	5300 lumen/60W
LED6800	6800 lumen/80W

Listed lumens and wattages are component measurements. See photometrics for fixture values.

COLOR TEMPERATURE .....

27K	2700K
3K	3000K
35K	3500K
4K	4000K
5K	5000K

FINISH ..... WH

WH	White

ACCESSORIES .....

SM-EL2x4	Surface mount kit
FR-EL2x4	Flange recessed kit for drywall applications
CC-EL	Cord & cable kit, 6-ft length

LUMENS*

Lumens*	Delivered	Temp	Watts*
4400	4350	2700K	50W
4400	4400	3000K	50W
4400	4488	3500K	50W
4400	4450	4000K	50W
4400	4500	5000K	50W
5300	5220	2700K	60W
5300	5280	3000K	60W
5300	5782	3500K	60W
5300	5340	4000K	60W
5300	5400	5000K	60W
6800	6400	2700K	80W
6800	6700	3000K	80W
6800	6740	3500K	80W
6800	6750	4000K	80W
6800	7274	5000K	80W

**Listed lumens and wattages are component measurements. See photometrics for fixture values*

P/N Example: CT-EL2x4-LED4400-3K-WH/FR-EL2x4

CT - EL2x4 - LED4400 - 3K - WH / FR - EL2x4

model | *lumens* | *temp* | *finish* | *accessories*

ATLANTIC LIGHTING

T: 508 678-5411 | F: 508 678-5408 www.atlantic-lighting.com

DESCRIPTION

The SGI LED is an architecturally styled, sealed direct/indirect luminaire. The enclosed and gasketed housing, and one-piece door protects against infiltration of airborne bacteria. Applications include patient rooms, hallways, exam and open areas, food processing/testing centers and pharmaceutical labs. Specify clear polycarbonate bottom lens for uses in detention centers, behavioral health, schools and public gathering areas.

Catalog #		Type
Project		
Comments		Date
Prepared by		

SPECIFICATION FEATURES

Fasteners
Flush-mounted, stainless steel machine screws secure the door to the housing and are evenly spaced to compress gasketing on all sides. Optional stainless steel, tamper-resistant screws, Torx® T20.

Housing
Die formed aluminum, white polyester powder coat paint finish.

Door
One-piece inset, fully gasketed, steel or aluminum extruded door with matte white polyester powder coat. Two aircraft cables attach the door to the housing, along with (6) counter sunk stainless steel phillips head screws (tamper proof available). Continuous piano hinge available with extruded aluminum door.

Gasket
Closed cell gasketing between housing and door.

Finish
Matte white, electrostatically applied, white powder coat finish.

Inner Diffuser
Linear ribbed, frosted acrylic lens, 0100" thick. Optional clear acrylic with perforated and decorative inlays. Six inlay pattern choices. See page 3 for details.

Bottom Clear Lens
0.125" and 0.187" thick clear acrylic or polycarbonate. 0.250" thick clear polycarbonate. 0.375" thick clear polycarbonate available with steel door only.

Mounting
Compatible with 15/16" NEMA G T-bar system. For NEMA F Flange (hard pan ceilings) applications, specify the DFCL drywall framing kit.

Light Emitting Diode (LED)
LEDs available in 3000K, 3500K, 4000K and 5000K with CRI > 85. Projected life is 50,000 hours at 70% lumen maintenance.

Transformer/Driver
Electronic driver 120-277V. 0-10V dimming driver standard.

Labels
ETL listed for damp locations. Wet location under covered ceiling optional. IP65 optional. NSF=NSF2 (Non-food, splash zone) available with steel door, aircraft cable attachment.

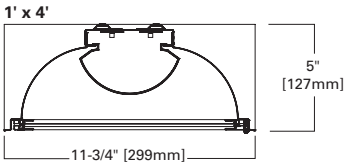

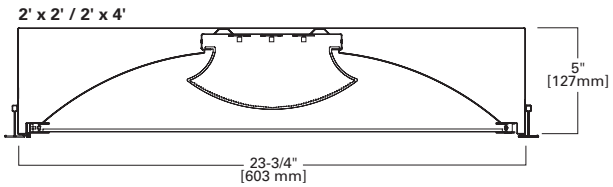

SGI WITH 0.125" THICK CLEAR ACRYLIC LENS, FROSTED ACRYLIC DIFFUSER

Number of Modules, Level	2' x 4'		2' x 2'		1' x 4'	
	Input Watts	Delivered Lumens*	Input Watts	Delivered Lumens*	Input Watts	Delivered Lumens*
1LO	27.2	1677	13.1	864	23.9	2098
1STD	36.6	2342	18.3	1153	34.1	2794
1HI	47.2	2945	23.6	1534	45.1	3405
2LO	52.4	4738	26.2	2268	52.4	4086
2STD	73.2	6310	36.6	3021	73.2	5441
2HI	90.2	7689	45.0	3681	90.1	6630
3LO	78.6	7100	39.3	3376	N/A	N/A
3STD	109.8	9455	54.9	4496	N/A	N/A
3HI	135.1	11521	67.5	5479	N/A	N/A

Lumen Multipliers For Decorative Lenses

Thin Blue Stripe	0.98
Medium Blue Stripe	0.96
Swirl	0.83
Curve	0.85
Classic	0.91
Border	0.89

Nominal input wattage values include LED voltage, drive current and typical driver efficiency. Refer to LM79 test data/photometric files for exact delivered lumen values, as values above are nominal/approximate.

* Delivered lumens will decrease by approximately 3% for 0.125" clear polycarbonate.
* Delivered lumens will decrease by approximately 6% for 0.250" clear polycarbonate (relative to 0.125" thick acrylic).
* 1' x 4' photometry in-progress.

SGI LED

Sealed and Gasketed
Bottom Clear Lens
1' x 4'
2' x 2'
2' x 4'

LD4 LED
Patient Room
Sterile Environment
Behavioral Health
High Abuse
Food Preparation

RECESSED

Wet Location
Sealed Unit

Fully Lensed Door

IP65
NSF

Powering Business Worldwide

ORDERING INFORMATION

SAMPLE NUMBER: SGI-G-12-4-LD4-2-STD-40-CA125-FA-CRSW-UNV-EDC2-ASY

SGI | **G** | | | **LD4** | | | | | | | **UNV** | | | | |

Series
SGI=Sealed and Gasketed Direct/Indirect [1]

Ceiling
G=Grid [5]

For flange (sheetrock, hard-lid) ceilings, specify the following:
2' x 2': DFCL-2424W-U [4]
2' x 2': DFCL-2424AMW-U [4]
2' x 4': DFCL-2448W-U [4]
2' x 4': DFCL-2448AMW-U [4]
1' x 4': DFCL-1248W-U [4]
1' x 4': DFCL-1248AMW-U [4]

Note:
"AMW" in place of "W" for anti-microbial matte white paint finish.

DCFL kits ship with gasketing, applied in the field.

Width
12=12"
[Blank]=24"

Length
2=2'
4=4'

LD4=LED 4.0

No. of LED Modules in Cross-section
1=(1) LED Module
2=(2) LED Modules
3=(3) LED Modules (24" wide only)

Illumination Level
STD=Standard
LO=Low
HI=High

Color Temperature
30=3000K
35=3500K
40=4000K
50=5000K

Bottom Lens
CA125=Clear Acrylic, Smooth, 0.125" thick
CA187=Clear Acrylic, Smooth, 0.187" thick
CP125=Clear Polycarbonate, Smooth, 0.125" thick
CP187=Clear Polycarbonate, Smooth, 0.187" thick
CP250=Clear Polycarbonate, Smooth, 0.250" thick
CP375=Clear Polycarbonate, Smooth, 0.375" thick [10]

Diffuser
FA=Frosted Acrylic, Linear Ribbed

Decorative Inlay (2x2, 2x4 only)
STRT/BL=Thin Stripe, Blue
To order different color of stripe, use BK or RD in place of "BL".
BK=Black
RD=Red
STRM/BL=Medium Stripe, Blue
To order different color of stripe, use BK or RD in place of "BL".
BK=Black
RD=Red
CLSC=Classic
BRDR=Border
SWRL=Swirl
CURV=Curve

See page 3 for details

Door [9]
CRSW=Die formed steel door, painted matte white
ALW=Die formed aluminum door, painted matte white
ALXP=Aluminum extruded door, painted matte white
ALXPCPH=Aluminum extruded door, painted matte white, continuous piano hinge

Voltage
UNV=120V-277V
120=120V
277=277V

Electronic Driver [7]
EDC_=Non-Dimming
EDD_=0-10V Dimming, 10%
ED1D_=0-10V Dimming, 1%
5LTD_=Fifth Light Dali, Dimming

No. of Circuits
1=1 Circuit
2=2 Circuits
3=3 Circuits

Options
EL10W=Emergency Battery Pack, 10 watt output [2, 3]
GLR=Fuse and Holder
AM=Antimicrobial Finish, exposed surfaces
TP=Tamper-proof Screws (Torx® T20) [6]
WL=Wet Location Under Covered Ceiling
ASY=Asymmetric distribution (1' x 4' only)
IP65=IP65 Rated [8]
NSF=NSF2 Listed (Non-food, splash zone) [8]

Accessories (order separately)
VRSD=Vandal Resistant Screwdriver, Torx® T20
MSC4-PK=Mounting Security Clips. Use to secure fixture to grid or to attach tie-wires
DFCL-2448W-U*=2' x 4' gasketed drywall framing kit. Ships with gasket to be applied in field. Cut out dimension 24.25" x 48.25"
DFCL-1248W-U*=1' x 4' gasketed drywall framing kit. Ships with gasket to be applied in field. Cut out dimension 12.25" x 48.25"
DFCL-2424W-U=2' x 2' gasketed drywall framing kit. Ships with gasket to be applied in field. Cut out dimension 24.25" x 24.25"

*Change W to AMW for antimicrobial matte white finish

Notes:
1 Hard metric sizes available. Consult factory.
2 When choosing EL option, voltage must be specified.
3 EL only available with "LO" illumination level with (3) LED modules, available with "STD" or "LO" illumination level with (2) LED modules in cross-section.
4 Ceiling cutout dimensions: 2' x 2' = 24-3/8" x 24-3/8"; 2' x 4' = 24-3/8" x 48-3/8"; 1' x 4' = 12-3/8" x 48-3/8". Ships with gasketing applied in field.
5 For 15/16" NEMA G T-bar ceiling system. For 1-1/2" T-bar ceiling systems, please consult factory. Extended lead-times likely.
6 TP defaults to standard lanyard (aircraft cable) door. Six screws secure the door to the housing. If TP option is specified with ALXPCPH, three screws are used. Counter sunk, stainless steel, Torx® T20.
7 EDC3 not available 1' x 4'. Standard EDC_ driver, the low voltage leads not connected to driver. EDD_ and ED1D_ driver, low voltage leads are connected to driver.
8 IP65, NSF available with CRSW door only.
9 Continuous piano hinge available with aluminum extruded door only.
10 CP375 only available with CRSW door.

Powering Business Worldwide

Eaton's Cooper Lighting Business
1121 Highway 74 South
Peachtree City, GA 30269
P: 770-486-4800
www.eaton.com/lighting

Specifications and dimensions subject to change without notice.

LENS OPTIONS

STRT/BL=Thin Stripe, Blue

BL=Blue
BK=Black
RD=Red

STRM/BL=Medium Stripe, Blue

BL=Blue
BK=Black
RD=Red

CLSC=Classic

BRDR=Border

SWRL=Swirl

CURV=Curve

Metalux

Catalog #		Type
Project		
Comments		Date
Prepared by		

DESCRIPTION

SNLED Lensed is a narrow LED lensed striplight series. This high quality luminaire is dedicated to the latest solid state lighting and electronic driver technology for optimal performance and energy efficiency. This Lensed product is available with three different lens types.

The small size of the SNLED makes it an ideal choice for size restricted architectural applications. The SNLED Series can be the illumination solution in commercial, industrial, retail and residential applications. Fixtures can be used in storage/utility areas, coves, display cases, shops, task and general area lighting.

SNLED LENSED
LED

Lensed LED Striplight

powered by fifthlight technology

SPECIFICATION FEATURES

Construction
Channel is die formed cold rolled steel with numerous KOs for ease of installation. Groove for Tong Hanger. End plate quickly converts to snap-in channel connector for continuous row alignment. Channel/wireway cover secured with sheet metal screws.

Controls
Equipped standard with a 0-10V continuous dimming driver that works with any standard 0-10V control/dimmer. Dimming range is 10% to 100%; varies by control device. Combine with energy-saving products like occupancy sensors, day lighting controls, and lighting relay panels to maximize energy savings. For motion control, reference options for both end and middle of the row applications.

Electrical
Long-Life LED system coupled with electronic (120-277V) driver to deliver optimal lighting performance. LED's available in 3000K, 3500K, 4000K, or 5000K with a CRI ≥ 85. Other color temperatures are available. Projected life is 60,000 + hours at 70% lumen output based on TM21. This driver is 0-10V dimming standard.

Emergency Battery Pack Option
Optional 120v-277v integral emergency battery pack is available in 7-watts or 14-watts to meet critical life-safety lighting requirements. The 90-minute batteries provide constant power to the LED system, ensuring code-compliance. A test switch/indicator button can be tested safely from the ground using a laser pointer, while the patented EZ Key prevents accidental discharge of the battery during construction. See ordering information for details.

Finish
Multistage iron phosphate pretreatment ensures maximum bonding and rust inhibitor. High reflective paint after fabrication, baked white enamel finish is standard.

Channel/Wireway Cover
Die formed heavy gauge steel. Tight fit for ease of maintenance.

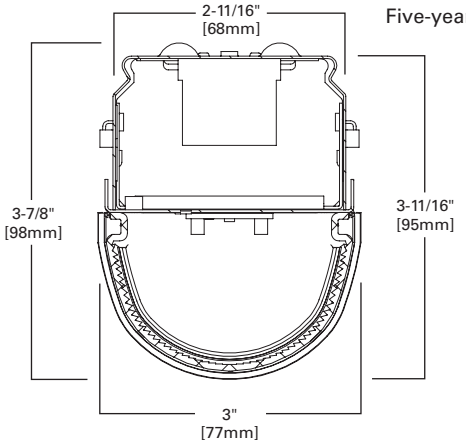

Shielding
Offers three different lensed optical distributions. (LC) Clear with linear optical ribs. (LN) Semi-frost for narrow distribution. (LW) Full frost for wide distribution.

Installation
Fixture may be surface, pendant, or stem mounted. See accessories below in ordering information.

Compliance
Components are UL recognized. Indoor luminaires are cULus listed for 40° C ambient environments, RoHS compliant, damp location listed, and comply with IESNA LM-79. LEDs comply with LM-80 standards. DesignLights Consortium® Qualified. Refer to www.designlights.org Qualified Products List under Family Models for details.

Warranty
Five-year warranty.

MOUNTING DATA

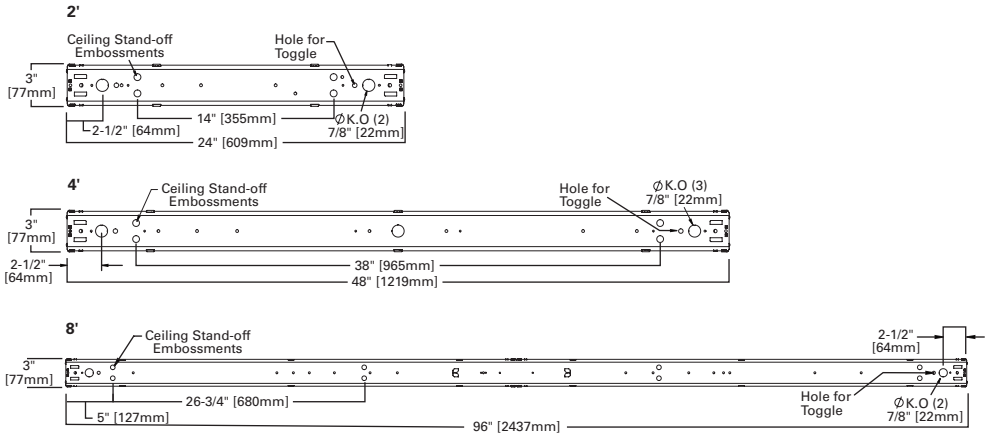

LINEAR DISCONNECT
Safe and convenient means of disconnecting power

Powering Business Worldwide

WATTAGE

SNLED Type	Stock* / MTO	Lumen Type	Length	Catalog Logic	Nominal Lumens	Wattage	lm/W
Clear Lens (LC)	MTO	Standard	2 ft.	2SNLED-LD4-18SL-LC-UNV-L8XX-CD1-U	1907	17	105
Clear Lens (LC)	MTO	Standard	2 ft.	2SNLED-LD4-22SL-LC-UNV-L8XX-CD1-U	2325	22	101
Clear Lens (LC)	MTO	Standard	2 ft.	2SNLED-LD4-26SL-LC-UNV-L8XX-CD1-U	2712	23	112
Clear Lens (LC)	MTO	Standard	4 ft.	4SNLED-LD4-18SL-LC-UNV-L8XX-CD1-U	2038	16	111
Clear Lens (LC)	MTO	Standard	4 ft.	4SNLED-LD4-22SL-LC-UNV-L8XX-CD1-U	2301	18	120
Clear Lens (LC)	Stock	Standard	4 ft.	4SNLED-LD4-26SL-LC-UNV-L8XX-CD1-U	2688	22	120
Clear Lens (LC)	Stock	Standard	4 ft.	4SNLED-LD4-30SL-LC-UNV-L8XX-CD1-U	3061	25	120
Clear Lens (LC)	MTO	Standard	4 ft.	4SNLED-LD4-34SL-LC-UNV-L8XX-CD1-U	3431	28	120
Clear Lens (LC)	MTO	Standard	4 ft.	4SNLED-LD4-37SL-LC-UNV-L8XX-CD1-U	3822	32	114
Clear Lens (LC)	MTO	Standard	4 ft.	4SNLED-LD4-41SL-LC-UNV-L8XX-CD1-U	4233	37	112
Clear Lens (LC)	Stock	Standard	4 ft.	4SNLED-LD4-46SL-LC-UNV-L8XX-CD1-U	4615	41	112
Clear Lens (LC)	MTO	Standard	4 ft.	4SNLED-LD4-49SL-LC-UNV-L8XX-CD1-U	4994	46	107
Clear Lens (LC)	MTO	Standard	4 ft.	4SNLED-LD4-52SL-LC-UNV-L8XX-CD1-U	5357	50	104
Clear Lens (LC)	MTO	Standard	4 ft.	4SNLED-LD4-56SL-LC-UNV-L8XX-CD1-U	5714	56	99
Clear Lens (LC)	MTO	High	4 ft.	4SNLED-LD4-60HL-LC-UNV-L8XX-CD1-U	6115	51	118
Clear Lens (LC)	MTO	Standard	8 ft.	8TSNLED-LD4-60SL-LC-UNV-L8XX-CD1-U	6122	50	120
Clear Lens (LC)	MTO	Standard	8 ft.	8TSNLED-LD4-68SL-LC-UNV-L8XX-CD1-U	6863	57	120
Clear Lens (LC)	Stock	Standard	8 ft.	8TSNLED-LD4-75SL-LC-UNV-L8XX-CD1-U	7643	65	116
Clear Lens (LC)	Stock	Standard	8 ft.	8TSNLED-LD4-83SL-LC-UNV-L8XX-CD1-U	8466	73	113
Clear Lens (LC)	MTO	Standard	8 ft.	8TSNLED-LD4-90SL-LC-UNV-L8XX-CD2-U	9230	82	110
Clear Lens (LC)	MTO	Standard	8 ft.	8TSNLED-LD4-98SL-LC-UNV-L8XX-CD2-U	9988	91	107
Clear Lens (LC)	MTO	Standard	8 ft.	8TSNLED-LD4-105SL-LC-UNV-L8XX-CD2-U	10714	100	105
Clear Lens (LC)	MTO	High	8 ft.	8SNLED-LD4-130HL-LC-UNV-L8XX-CD1-U	13000	130	100
Clear Lens (LC)	MTO	High	8 ft.	8SNLED-LD4-170HL-LC-UNV-L8XX-CD1-U	17460	140	125

SNLED Type	Stock* / MTO	Lumen Type	Length	Catalog Logic	Nominal Lumens	Wattage	lm/W
Semi-Frost Lens (LN)	MTO	Standard	2 ft.	2SNLED-LD4-18SL-LN-UNV-L8XX-CD1-U	1901	17	105
Semi-Frost Lens (LN)	MTO	Standard	2 ft.	2SNLED-LD4-22SL-LN-UNV-L8XX-CD1-U	2318	22	101
Semi-Frost Lens (LN)	MTO	Standard	2 ft.	2SNLED-LD4-26SL-LN-UNV-L8XX-CD1-U	2704	23	116
Semi-Frost Lens (LN)	MTO	High	2 ft.	2SNLED-LD4-32HL-LN-UNV-L8XX-CD1-U	3200	32	100
Semi-Frost Lens (LN)	MTO	Standard	4 ft.	4SNLED-LD4-18SL-LN-UNV-L8XX-CD1-U	2032	16	111
Semi-Frost Lens (LN)	MTO	Standard	4 ft.	4SNLED-LD4-22SL-LN-UNV-L8XX-CD1-U	2294	18	120
Semi-Frost Lens (LN)	Stock	Standard	4 ft.	4SNLED-LD4-26SL-LN-UNV-L8XX-CD1-U	2680	22	120
Semi-Frost Lens (LN)	Stock	Standard	4 ft.	4SNLED-LD4-30SL-LN-UNV-L8XX-CD1-U	3052	25	120
Semi-Frost Lens (LN)	MTO	Standard	4 ft.	4SNLED-LD4-34SL-LN-UNV-L8XX-CD1-U	3421	28	120
Semi-Frost Lens (LN)	MTO	Standard	4 ft.	4SNLED-LD4-37SL-LN-UNV-L8XX-CD1-U	3810	32	114
Semi-Frost Lens (LN)	MTO	Standard	4 ft.	4SNLED-LD4-41SL-LN-UNV-L8XX-CD1-U	4220	37	112
Semi-Frost Lens (LN)	Stock	Standard	4 ft.	4SNLED-LD4-46SL-LN-UNV-L8XX-CD1-U	4601	41	112
Semi-Frost Lens (LN)	MTO	Standard	4 ft.	4SNLED-LD4-49SL-LN-UNV-L8XX-CD1-U	4979	46	107
Semi-Frost Lens (LN)	MTO	Standard	4 ft.	4SNLED-LD4-53SL-LN-UNV-L8XX-CD1-U	5341	50	106
Semi-Frost Lens (LN)	MTO	Standard	4 ft.	4SNLED-LD4-56SL-LN-UNV-L8XX-CD1-U	5697	56	99
Semi-Frost Lens (LN)	MTO	High	4 ft.	4SNLED-LD4-60HL-LN-UNV-L8XX-CD1-U	6096	51	118
Semi-Frost Lens (LN)	MTO	Standard	8 ft.	8TSNLED-LD4-60SL-LN-UNV-L8XX-CD1-U	6103	50	120
Semi-Frost Lens (LN)	MTO	Standard	8 ft.	8TSNLED-LD4-68SL-LN-UNV-L8XX-CD1-U	6842	57	120
Semi-Frost Lens (LN)	Stock	Standard	8 ft.	8TSNLED-LD4-75SL-LN-UNV-L8XX-CD1-U	7620	65	116
Semi-Frost Lens (LN)	Stock	Standard	8 ft.	8TSNLED-LD4-83SL-LN-UNV-L8XX-CD1-U	8441	73	113
Semi-Frost Lens (LN)	MTO	Standard	8 ft.	8TSNLED-LD4-91SL-LN-UNV-L8XX-CD2-U	9202	82	111
Semi-Frost Lens (LN)	MTO	Standard	8 ft.	8TSNLED-LD4-98SL-LN-UNV-L8XX-CD2-U	9958	91	107
Semi-Frost Lens (LN)	MTO	Standard	8 ft.	8TSNLED-LD4-106SL-LN-UNV-L8XX-CD2-U	10681	100	106
Semi-Frost Lens (LN)	MTO	High	8 ft.	8TSNLED-LD4-130HL-LN-UNV-L8XX-CD2-U	13000	130	100
Semi-Frost Lens (LN)	MTO	High	8 ft.	8TSNLED-LD4-170HL-LN-UNV-L8XX-CD2-U	17100	140	122

WATTAGE

SNLED Type	Stock* / MTO	Lumen Type	Length	Catalog Logic	Nominal Lumens	Wattage	lm/W
Full Frost Lens (LW)	MTO	Standard	2 ft.	2SNLED-LD4-16SL-LW-UNV-L8XX-CD1-U	1702	17	99
Full Frost Lens (LW)	MTO	Standard	2 ft.	2SNLED-LD4-20SL-LW-UNV-L8XX-CD1-U	2075	22	92
Full Frost Lens (LW)	MTO	Standard	2 ft.	2SNLED-LD4-23SL-LW-UNV-L8XX-CD1-U	2421	23	104
Full Frost Lens (LW)	MTO	Standard	4 ft.	4SNLED-LD4-16SL-LW-UNV-L8XX-CD1-U	1819	16	111
Full Frost Lens (LW)	MTO	Standard	4 ft.	4SNLED-LD4-20SL-LW-UNV-L8XX-CD1-U	2054	18	109
Full Frost Lens (LW)	Stock	Standard	4 ft.	4SNLED-LD4-23SL-LW-UNV-L8XX-CD1-U	2399	22	111
Full Frost Lens (LW)	Stock	Standard	4 ft.	4SNLED-LD4-27SL-LW-UNV-L8XX-CD1-U	2732	25	108
Full Frost Lens (LW)	MTO	Standard	4 ft.	4SNLED-LD4-30SL-LW-UNV-L8XX-CD1-U	3062	28	106
Full Frost Lens (LW)	MTO	Standard	4 ft.	4SNLED-LD4-33SL-LW-UNV-L8XX-CD1-U	3411	32	105
Full Frost Lens (LW)	MTO	Standard	4 ft.	4SNLED-LD4-37SL-LW-UNV-L8XX-CD1-U	3778	37	101
Full Frost Lens (LW)	Stock	Standard	4 ft.	4SNLED-LD4-41SL-LW-UNV-L8XX-CD1-U	4119	41	100
Full Frost Lens (LW)	MTO	Standard	4 ft.	4SNLED-LD4-44SL-LW-UNV-L8XX-CD1-U	4457	46	96
Full Frost Lens (LW)	MTO	Standard	4 ft.	4SNLED-LD4-47SL-LW-UNV-L8XX-CD1-U	4781	50	94
Full Frost Lens (LW)	MTO	Standard	4 ft.	4SNLED-LD4-50SL-LW-UNV-L8XX-CD1-U	5100	56	89
Full Frost Lens (LW)	MTO	High	4 ft.	4SNLED-LD4-54HL-LW-UNV-L8XX-CD1-U	5458	51	106
Full Frost Lens (LW)	MTO	Standard	8 ft.	8TSNLED-LD4-54SL-LW-UNV-L8XX-CD1-U	5464	50	108
Full Frost Lens (LW)	MTO	Standard	8 ft.	8TSNLED-LD4-61SL-LW-UNV-L8XX-CD1-U	6125	57	107
Full Frost Lens (LW)	Stock	Standard	8 ft.	8TSNLED-LD4-67SL-LW-UNV-L8XX-CD1-U	6822	65	104
Full Frost Lens (LW)	Stock	Standard	8 ft.	8TSNLED-LD4-74SL-LW-UNV-L8XX-CD1-U	7556	73	101
Full Frost Lens (LW)	MTO	Standard	8 ft.	8TSNLED-LD4-81SL-LW-UNV-L8XX-CD2-U	8238	82	99
Full Frost Lens (LW)	MTO	Standard	8 ft.	8TSNLED-LD4-88SL-LW-UNV-L8XX-CD2-U	8915	91	96
Full Frost Lens (LW)	MTO	Standard	8 ft.	8TSNLED-LD4-95SL-LW-UNV-L8XX-CD2-U	9562	100	95
Full Frost Lens (LW)	MTO	High	8 ft.	8TSNLED-LD4-110HL-LW-UNV-L8XX-CD2-U	11000	130	84
Full Frost Lens (LW)	MTO	High	8 ft.	8TSNLED-LD4-150HL-LW-UNV-L8XX-CD2-U	15300	140	121

* Stocked in either 3500K or 4000K

PHOTOMETRICS

See website for IES/photometric files

LUMEN MAINTENANCE

Ambient Temperature	TM-21 Lumen Maintenance (12,000 hours)	Theoretical L70 (Hours)
25°C	92.55%	273,000

Max Ambient temp in compliance with CSA: 40°C

ORDERING INFORMATION

SAMPLE NUMBER: 4SNLED-LD4-46SL-LN-UNV-L835-CD1-U

2=2' Length
4=4' Length
8T=8' Length

Series
SNLED=Commercial LED Striplight [9]

Lamp Type
LD4=LED 4.0

LED Lumens Output [2]

Stocked Lumen Packages - LC
26SL=2600 [8]
30SL=3000
46SL=4600
75SL=7500 [14]
83SL=8300 [14]

MTO Lumen Packages - LC
18SL=1800 [8]
22SL=2200
34SL=3400
37SL=3700
41SL=4100
49SL=4900
52SL=5200
56SL=5600
60SL=6000 [14]
60HL=6000 [1], [14]
68SL=6800 [14]
90SL=9000 [3], [14]
98SL=9800 [3], [14]
105SL=10,500 [3], [14]
130HL=13,000 [3], [12], [14]
170HL=17,000 [3], [12], [14]

Stocked Lumen Packages - LN
26SL=2600 [8]
30SL=3000
32HL=3200
46SL=4600
75SL=7500 [14]
83SL=8300 [14]

MTO Lumen Packages - LN
18SL=1800 [8]
22SL=2200 [8]
34SL=3400
37SL=3700
41SL=4100
49SL=4900
53SL=5300
56SL=5600
60SL=6000
60HL=6000 [1], [14]
68SL=6800 [14]
91SL=9100 [3], [14]
98SL=9800 [3], [14]
106SL=10,600 [3], [14]
130HL=13,000 [3], [14]
170HL=17,000 [3], [14]

Stocked Lumen Packages - LW
23SL=2300 [8]
27SL=2700
41SL=4100
67SL=6700 [14]
74SL=7400 [14]

MTO Lumen Packages - LW
16SL=1600 [8]
20SL=2000
30SL=3000
33SL=3300
37SL=3700
44SL=4400
47SL=4700
50SL=5000
54SL=5400
54HL=5400 [1], [14]
61SL=6100 [14]
81SL=8100 [3], [14]
88SL=8800 [3], [14]
95SL=9500 [3], [14]
110HL=11,000 [3], [14]
150HL=15,300 [3], [14]

Optic
LC=Clear Lens
LN=Semi-Frost Lens - Narrow
LW=Full Frost Lens - Wide

Voltage
UNV=Universal Voltage 120-277
347=347V
480=480V [4]

Options

Emergency
EL7W=7-watt, 120V-277V emergency battery pack installed [7], [4]
EL14W=14-watt 120V-277V emergency battery pack installed [7], [4]
GTD2=Bodine Generator Transfer Device [13]
ETS2=IOTA Emergency Transfer Switch [13]

Wiring
PI/CPI=Plug-in Option

Motion Sensors
LB-ERMS360=360° Low Bay Motion Sensor - End of Row
LB-MRMS360=360° Low Bay Motion Sensor - Middle of Row
HB-ERMS360=360° High Bay Motion Sensor - End of Row [5]
HB-MRMS360=360° High Bay Motion Sensor - Middle of Row [5]

CCT
L830=3000K
L835=3500K
L840=4000K
L850=5000K

Driver Type
CD=0-10V Dimming Driver (10% - 100% Dimming)
HCD=0-10V Dimming Driver (1% - 100% Dimming) [11]
SD=Step-dim (Bi Level) [4], [10]
5LTD=Fifth Light (DALI) Driver [4], [6]

Number of Drivers
1=1 Driver
2=2 Drivers

Packaging
U=Unit Pack

ACCESSORIES

(Order Separately)
AYC-Chain/Set=36" Chain Hanger (Use 1 set per fixture)
SCF=Fixed Stem Set (Specify Length)
SCS=Swivel Stem Set (Specify Length)
SCA=Adjustable 48" Stem Set
EYE CHAIN SET/3FT=Eye Bolt Chain (Use 1 set per fixture)
WG/SNF-2FT=2' Wire Guard
WG/SNF-4FT=4' Wire Guard
A1B/Spacer-U=Spacer 1-1/2" to 2-1/2" from ceiling (Use 2 per fixture)
TOGGLE=Single Toggle No. 2 (Specify Length)
Y-TOGGLE=Y Toggle No. 2 (Specify Length)

NOTES: [1] 4 ft. only. [2] Nominal lumen values. [3] Two drivers required. [4] 4 ft. and 8 ft. only. [5] Motion Sensor offers dimmability. [6] For a complete listing of Fifth Light products, visit www.eaton.com/lightingsystems [7] With integral test switch/indicator/laser test. For approximate delivered lumens multiply the lumens per watt of the desired fixture by the wattage of the emergency battery pack (100 lm/W x 7=700 lumens). IES-format photometry for luminaire under emergency operation available. [8] 2 ft. and 4 ft. only. [9] DesignLights Consortium™ Qualified and classified for DLC Standard (all lumen packages), refer to www.designlights.org for details. [10] 4100 lumen and above on 4 ft. and 8200 lumen and above on 8 ft. [11] HCD driver option requires two drivers for 6700 – 10,500 lumens. Not available for 13,000 lumens and above. [12] Not currently listed on DLC QPL. [13] Used to transfer fixture to secondary power source for life-safety operation. When used with a dimming fixture, two devices are required to ensure control is disabled while operating under emergency power. [14] 8 ft. only.

Specifications & dimensions subject to change without notice. Consult your Eaton Representative for availability and ordering information.

SHIPPING DATA

Length.	Wt.
2 ft.	4.3 lbs.
4 ft.	8.2 lbs.
8 ft.	15.1 lbs.

Powering Business Worldwide

Eaton
1121 Highway 74 South
Peachtree City, GA 30269
P: 770-486-4800
www.eaton.com/lighting

Specifications and dimensions subject to change without notice.

Metalux

Catalog #		Type
Project		
Comments		Date
Prepared by		

DESCRIPTION

SNLED Lensed is a narrow LED lensed striplight series. This high quality luminaire is dedicated to the latest solid state lighting and electronic driver technology for optimal performance and energy efficiency. This Lensed product is available with three different lens types.

The small size of the SNLED makes it an ideal choice for size restricted architectural applications. The SNLED Series can be the illumination solution in commercial, industrial, retail and residential applications. Fixtures can be used in storage/utility areas, coves, display cases, shops, task and general area lighting.

SNLED LENSED
LED

Lensed LED Striplight

powered by fifthlight technology

SPECIFICATION FEATURES

Construction
Channel is die formed cold rolled steel with numerous KOs for ease of installation. Groove for Tong Hanger. End plate quickly converts to snap-in channel connector for continuous row alignment. Channel/wireway cover secured with sheet metal screws.

Controls
Equipped standard with a 0-10V continuous dimming driver that works with any standard 0-10V control/dimmer. Dimming range is 10% to 100%; varies by control device. Combine with energy-saving products like occupancy sensors, day lighting controls, and lighting relay panels to maximize energy savings. For motion control, reference options for both end and middle of the row applications.

Electrical
Long-Life LED system coupled with electronic (120-277V) driver to deliver optimal lighting performance. LED's available in 3000K, 3500K, 4000K, or 5000K with a CRI ≥ 85. Other color temperatures are available. Projected life is 60,000 + hours at 70% lumen output based on TM21. This driver is 0-10V dimming standard.

Emergency Battery Pack Option
Optional 120v-277v integral emergency battery pack is available in 7-watts or 14-watts to meet critical life-safety lighting requirements. The 90-minute batteries provide constant power to the LED system, ensuring code-compliance. A test switch/indicator button can be tested safely from the ground using a laser pointer, while the patented EZ Key prevents accidental discharge of the battery during construction. See ordering information for details.

Finish
Multistage iron phosphate pretreatment ensures maximum bonding and rust inhibitor. High reflective paint after fabrication, baked white enamel finish is standard.

Channel/Wireway Cover
Die formed heavy gauge steel. Tight fit for ease of maintenance.

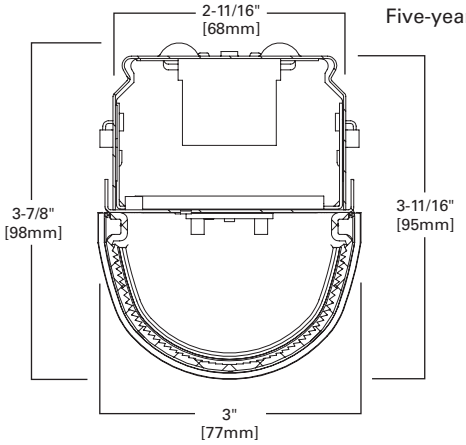

Shielding
Offers three different lensed optical distributions. (LC) Clear with linear optical ribs. (LN) Semi-frost for narrow distribution. (LW) Full frost for wide distribution.

Installation
Fixture may be surface, pendant, or stem mounted. See accessories below in ordering information.

Compliance
Components are UL recognized. Indoor luminaires are cULus listed for 40° C ambient environments, RoHS compliant, damp location listed, and comply with IESNA LM-79. LEDs comply with LM-80 standards. DesignLights Consortium® Qualified. Refer to www.designlights.org Qualified Products List under Family Models for details.

Warranty
Five-year warranty.

MOUNTING DATA

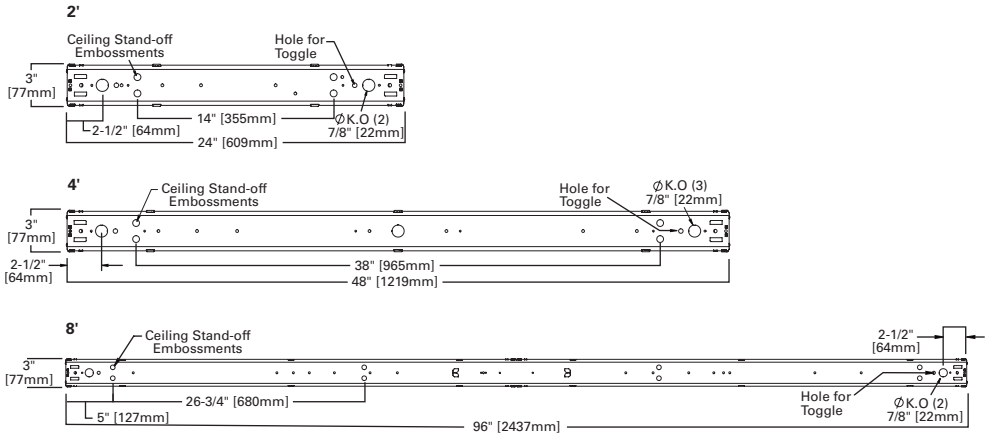

LINEAR DISCONNECT
Safe and convenient means of disconnecting power

Powering Business Worldwide

WATTAGE

SNLED Type	Stock* / MTO	Lumen Type	Length	Catalog Logic	Nominal Lumens	Wattage	lm/W
Clear Lens (LC)	MTO	Standard	2 ft.	2SNLED-LD4-18SL-LC-UNV-L8XX-CD1-U	1907	17	105
Clear Lens (LC)	MTO	Standard	2 ft.	2SNLED-LD4-22SL-LC-UNV-L8XX-CD1-U	2325	22	101
Clear Lens (LC)	MTO	Standard	2 ft.	2SNLED-LD4-26SL-LC-UNV-L8XX-CD1-U	2712	23	112
Clear Lens (LC)	MTO	Standard	4 ft.	4SNLED-LD4-18SL-LC-UNV-L8XX-CD1-U	2038	16	111
Clear Lens (LC)	MTO	Standard	4 ft.	4SNLED-LD4-22SL-LC-UNV-L8XX-CD1-U	2301	18	120
Clear Lens (LC)	Stock	Standard	4 ft.	4SNLED-LD4-26SL-LC-UNV-L8XX-CD1-U	2688	22	120
Clear Lens (LC)	Stock	Standard	4 ft.	4SNLED-LD4-30SL-LC-UNV-L8XX-CD1-U	3061	25	120
Clear Lens (LC)	MTO	Standard	4 ft.	4SNLED-LD4-34SL-LC-UNV-L8XX-CD1-U	3431	28	120
Clear Lens (LC)	MTO	Standard	4 ft.	4SNLED-LD4-37SL-LC-UNV-L8XX-CD1-U	3822	32	114
Clear Lens (LC)	MTO	Standard	4 ft.	4SNLED-LD4-41SL-LC-UNV-L8XX-CD1-U	4233	37	112
Clear Lens (LC)	Stock	Standard	4 ft.	4SNLED-LD4-46SL-LC-UNV-L8XX-CD1-U	4615	41	112
Clear Lens (LC)	MTO	Standard	4 ft.	4SNLED-LD4-49SL-LC-UNV-L8XX-CD1-U	4994	46	107
Clear Lens (LC)	MTO	Standard	4 ft.	4SNLED-LD4-52SL-LC-UNV-L8XX-CD1-U	5357	50	104
Clear Lens (LC)	MTO	Standard	4 ft.	4SNLED-LD4-56SL-LC-UNV-L8XX-CD1-U	5714	56	99
Clear Lens (LC)	MTO	High	4 ft.	4SNLED-LD4-60HL-LC-UNV-L8XX-CD1-U	6115	51	118
Clear Lens (LC)	MTO	Standard	8 ft.	8TSNLED-LD4-60SL-LC-UNV-L8XX-CD1-U	6122	50	120
Clear Lens (LC)	MTO	Standard	8 ft.	8TSNLED-LD4-68SL-LC-UNV-L8XX-CD1-U	6863	57	120
Clear Lens (LC)	Stock	Standard	8 ft.	8TSNLED-LD4-75SL-LC-UNV-L8XX-CD1-U	7643	65	116
Clear Lens (LC)	Stock	Standard	8 ft.	8TSNLED-LD4-83SL-LC-UNV-L8XX-CD1-U	8466	73	113
Clear Lens (LC)	MTO	Standard	8 ft.	8TSNLED-LD4-90SL-LC-UNV-L8XX-CD2-U	9230	82	110
Clear Lens (LC)	MTO	Standard	8 ft.	8TSNLED-LD4-98SL-LC-UNV-L8XX-CD2-U	9988	91	107
Clear Lens (LC)	MTO	Standard	8 ft.	8TSNLED-LD4-105SL-LC-UNV-L8XX-CD2-U	10714	100	105
Clear Lens (LC)	MTO	High	8 ft.	8SNLED-LD4-130HL-LC-UNV-L8XX-CD1-U	13000	130	100
Clear Lens (LC)	MTO	High	8 ft.	8SNLED-LD4-170HL-LC-UNV-L8XX-CD1-U	17460	140	125

SNLED Type	Stock* / MTO	Lumen Type	Length	Catalog Logic	Nominal Lumens	Wattage	lm/W
Semi-Frost Lens (LN)	MTO	Standard	2 ft.	2SNLED-LD4-18SL-LN-UNV-L8XX-CD1-U	1901	17	105
Semi-Frost Lens (LN)	MTO	Standard	2 ft.	2SNLED-LD4-22SL-LN-UNV-L8XX-CD1-U	2318	22	101
Semi-Frost Lens (LN)	MTO	Standard	2 ft.	2SNLED-LD4-26SL-LN-UNV-L8XX-CD1-U	2704	23	116
Semi-Frost Lens (LN)	MTO	High	2 ft.	2SNLED-LD4-32HL-LN-UNV-L8XX-CD1-U	3200	32	100
Semi-Frost Lens (LN)	MTO	Standard	4 ft.	4SNLED-LD4-18SL-LN-UNV-L8XX-CD1-U	2032	16	111
Semi-Frost Lens (LN)	MTO	Standard	4 ft.	4SNLED-LD4-22SL-LN-UNV-L8XX-CD1-U	2294	18	120
Semi-Frost Lens (LN)	Stock	Standard	4 ft.	4SNLED-LD4-26SL-LN-UNV-L8XX-CD1-U	2680	22	120
Semi-Frost Lens (LN)	Stock	Standard	4 ft.	4SNLED-LD4-30SL-LN-UNV-L8XX-CD1-U	3052	25	120
Semi-Frost Lens (LN)	MTO	Standard	4 ft.	4SNLED-LD4-34SL-LN-UNV-L8XX-CD1-U	3421	28	120
Semi-Frost Lens (LN)	MTO	Standard	4 ft.	4SNLED-LD4-37SL-LN-UNV-L8XX-CD1-U	3810	32	114
Semi-Frost Lens (LN)	MTO	Standard	4 ft.	4SNLED-LD4-41SL-LN-UNV-L8XX-CD1-U	4220	37	112
Semi-Frost Lens (LN)	Stock	Standard	4 ft.	4SNLED-LD4-46SL-LN-UNV-L8XX-CD1-U	4601	41	112
Semi-Frost Lens (LN)	MTO	Standard	4 ft.	4SNLED-LD4-49SL-LN-UNV-L8XX-CD1-U	4979	46	107
Semi-Frost Lens (LN)	MTO	Standard	4 ft.	4SNLED-LD4-53SL-LN-UNV-L8XX-CD1-U	5341	50	106
Semi-Frost Lens (LN)	MTO	Standard	4 ft.	4SNLED-LD4-56SL-LN-UNV-L8XX-CD1-U	5697	56	99
Semi-Frost Lens (LN)	MTO	High	4 ft.	4SNLED-LD4-60HL-LN-UNV-L8XX-CD1-U	6096	51	118
Semi-Frost Lens (LN)	MTO	Standard	8 ft.	8TSNLED-LD4-60SL-LN-UNV-L8XX-CD1-U	6103	50	120
Semi-Frost Lens (LN)	MTO	Standard	8 ft.	8TSNLED-LD4-68SL-LN-UNV-L8XX-CD1-U	6842	57	120
Semi-Frost Lens (LN)	Stock	Standard	8 ft.	8TSNLED-LD4-75SL-LN-UNV-L8XX-CD1-U	7620	65	116
Semi-Frost Lens (LN)	Stock	Standard	8 ft.	8TSNLED-LD4-83SL-LN-UNV-L8XX-CD1-U	8441	73	113
Semi-Frost Lens (LN)	MTO	Standard	8 ft.	8TSNLED-LD4-91SL-LN-UNV-L8XX-CD2-U	9202	82	111
Semi-Frost Lens (LN)	MTO	Standard	8 ft.	8TSNLED-LD4-98SL-LN-UNV-L8XX-CD2-U	9958	91	107
Semi-Frost Lens (LN)	MTO	Standard	8 ft.	8TSNLED-LD4-106SL-LN-UNV-L8XX-CD2-U	10681	100	106
Semi-Frost Lens (LN)	MTO	High	8 ft.	8TSNLED-LD4-130HL-LN-UNV-L8XX-CD2-U	13000	130	100
Semi-Frost Lens (LN)	MTO	High	8 ft.	8TSNLED-LD4-170HL-LN-UNV-L8XX-CD2-U	17100	140	122

WATTAGE

SNLED Type	Stock* / MTO	Lumen Type	Length	Catalog Logic	Nominal Lumens	Wattage	lm/W
Full Frost Lens (LW)	MTO	Standard	2 ft.	2SNLED-LD4-16SL-LW-UNV-L8XX-CD1-U	1702	17	99
Full Frost Lens (LW)	MTO	Standard	2 ft.	2SNLED-LD4-20SL-LW-UNV-L8XX-CD1-U	2075	22	92
Full Frost Lens (LW)	MTO	Standard	2 ft.	2SNLED-LD4-23SL-LW-UNV-L8XX-CD1-U	2421	23	104
Full Frost Lens (LW)	MTO	Standard	4 ft.	4SNLED-LD4-16SL-LW-UNV-L8XX-CD1-U	1819	16	111
Full Frost Lens (LW)	MTO	Standard	4 ft.	4SNLED-LD4-20SL-LW-UNV-L8XX-CD1-U	2054	18	109
Full Frost Lens (LW)	Stock	Standard	4 ft.	4SNLED-LD4-23SL-LW-UNV-L8XX-CD1-U	2399	22	111
Full Frost Lens (LW)	Stock	Standard	4 ft.	4SNLED-LD4-27SL-LW-UNV-L8XX-CD1-U	2732	25	108
Full Frost Lens (LW)	MTO	Standard	4 ft.	4SNLED-LD4-30SL-LW-UNV-L8XX-CD1-U	3062	28	106
Full Frost Lens (LW)	MTO	Standard	4 ft.	4SNLED-LD4-33SL-LW-UNV-L8XX-CD1-U	3411	32	105
Full Frost Lens (LW)	MTO	Standard	4 ft.	4SNLED-LD4-37SL-LW-UNV-L8XX-CD1-U	3778	37	101
Full Frost Lens (LW)	Stock	Standard	4 ft.	4SNLED-LD4-41SL-LW-UNV-L8XX-CD1-U	4119	41	100
Full Frost Lens (LW)	MTO	Standard	4 ft.	4SNLED-LD4-44SL-LW-UNV-L8XX-CD1-U	4457	46	96
Full Frost Lens (LW)	MTO	Standard	4 ft.	4SNLED-LD4-47SL-LW-UNV-L8XX-CD1-U	4781	50	94
Full Frost Lens (LW)	MTO	Standard	4 ft.	4SNLED-LD4-50SL-LW-UNV-L8XX-CD1-U	5100	56	89
Full Frost Lens (LW)	MTO	High	4 ft.	4SNLED-LD4-54HL-LW-UNV-L8XX-CD1-U	5458	51	106
Full Frost Lens (LW)	MTO	Standard	8 ft.	8TSNLED-LD4-54SL-LW-UNV-L8XX-CD1-U	5464	50	108
Full Frost Lens (LW)	MTO	Standard	8 ft.	8TSNLED-LD4-61SL-LW-UNV-L8XX-CD1-U	6125	57	107
Full Frost Lens (LW)	Stock	Standard	8 ft.	8TSNLED-LD4-67SL-LW-UNV-L8XX-CD1-U	6822	65	104
Full Frost Lens (LW)	Stock	Standard	8 ft.	8TSNLED-LD4-74SL-LW-UNV-L8XX-CD1-U	7556	73	101
Full Frost Lens (LW)	MTO	Standard	8 ft.	8TSNLED-LD4-81SL-LW-UNV-L8XX-CD2-U	8238	82	99
Full Frost Lens (LW)	MTO	Standard	8 ft.	8TSNLED-LD4-88SL-LW-UNV-L8XX-CD2-U	8915	91	96
Full Frost Lens (LW)	MTO	Standard	8 ft.	8TSNLED-LD4-95SL-LW-UNV-L8XX-CD2-U	9562	100	95
Full Frost Lens (LW)	MTO	High	8 ft.	8TSNLED-LD4-110HL-LW-UNV-L8XX-CD2-U	11000	130	84
Full Frost Lens (LW)	MTO	High	8 ft.	8TSNLED-LD4-150HL-LW-UNV-L8XX-CD2-U	15300	140	121

* Stocked in either 3500K or 4000K

PHOTOMETRICS

See website for IES/photometric files

LUMEN MAINTENANCE

Ambient Temperature	TM-21 Lumen Maintenance (12,000 hours)	Theoretical L70 (Hours)
25°C	92.55%	273,000

Max Ambient temp in compliance with CSA: 40°C

ORDERING INFORMATION

SAMPLE NUMBER: 4SNLED-LD4-46SL-LN-UNV-L835-CD1-U

2=2' Length
4=4' Length
8T=8' Length

Series
SNLED=Commercial LED Striplight [9]

Lamp Type
LD4=LED 4.0

LED Lumens Output [2]

Stocked Lumen Packages - LC
26SL=2600 [8]
30SL=3000
46SL=4600
75SL=7500 [14]
83SL=8300 [14]

MTO Lumen Packages - LC
18SL=1800 [8]
22SL=2200
34SL=3400
37SL=3700
41SL=4100
49SL=4900
52SL=5200
56SL=5600
60SL=6000 [14]
60HL=6000 [1], [14]
68SL=6800 [14]
90SL=9000 [3], [14]
98SL=9800 [3], [14]
105SL=10,500 [3], [14]
130HL=13,000 [3], [12], [14]
170HL=17,000 [3], [12], [14]

Stocked Lumen Packages - LN
26SL=2600 [8]
30SL=3000
32HL=3200
46SL=4600
75SL=7500 [14]
83SL=8300 [14]

MTO Lumen Packages - LN
18SL=1800 [8]
22SL=2200 [8]
34SL=3400
37SL=3700
41SL=4100
49SL=4900
53SL=5300
56SL=5600
60SL=6000
60HL=6000 [1], [14]
68SL=6800 [14]
91SL=9100 [3], [14]
98SL=9800 [3], [14]
106SL=10,600 [3], [14]
130HL=13,000 [3], [14]
170HL=17,000 [3], [14]

Stocked Lumen Packages - LW
23SL=2300 [8]
27SL=2700
41SL=4100
67SL=6700 [14]
74SL=7400 [14]

MTO Lumen Packages - LW
16SL=1600 [8]
20SL=2000
30SL=3000
33SL=3300
37SL=3700
44SL=4400
47SL=4700
50SL=5000
54SL=5400
54HL=5400 [1], [14]
61SL=6100 [14]
81SL=8100 [3], [14]
88SL=8800 [3], [14]
95SL=9500 [3], [14]
110HL=11,000 [3], [14]
150HL=15,300 [3], [14]

Optic
LC=Clear Lens
LN=Semi-Frost Lens - Narrow
LW=Full Frost Lens - Wide

Voltage
UNV=Universal Voltage 120-277
347=347V
480=480V [4]

Options

Emergency
EL7W=7-watt, 120V-277V emergency battery pack installed [7], [4]
EL14W=14-watt 120V-277V emergency battery pack installed [7], [4]
GTD2=Bodine Generator Transfer Device [13]
ETS2=IOTA Emergency Transfer Switch [13]

Wiring
PI/CPI=Plug-in Option

Motion Sensors
LB-ERMS360=360° Low Bay Motion Sensor - End of Row
LB-MRMS360=360° Low Bay Motion Sensor - Middle of Row
HB-ERMS360=360° High Bay Motion Sensor - End of Row [5]
HB-MRMS360=360° High Bay Motion Sensor - Middle of Row [5]

CCT
L830=3000K
L835=3500K
L840=4000K
L850=5000K

Driver Type
CD=0-10V Dimming Driver (10% - 100% Dimming)
HCD=0-10V Dimming Driver (1% - 100% Dimming) [11]
SD=Step-dim (Bi Level) [4], [10]
5LTD=Fifth Light (DALI) Driver [4], [6]

Number of Drivers
1=1 Driver
2=2 Drivers

Packaging
U=Unit Pack

ACCESSORIES

(Order Separately)
AYC-Chain/Set=36" Chain Hanger (Use 1 set per fixture)
SCF=Fixed Stem Set (Specify Length)
SCS=Swivel Stem Set (Specify Length)
SCA=Adjustable 48" Stem Set
EYE CHAIN SET/3FT=Eye Bolt Chain (Use 1 set per fixture)
WG/SNF-2FT=2' Wire Guard
WG/SNF-4FT=4' Wire Guard
A1B/Spacer-U=Spacer 1-1/2" to 2-1/2" from ceiling (Use 2 per fixture)
TOGGLE=Single Toggle No. 2 (Specify Length)
Y-TOGGLE=Y Toggle No. 2 (Specify Length)

NOTES: [1] 4 ft. only. [2] Nominal lumen values. [3] Two drivers required. [4] 4 ft. and 8 ft. only. [5] Motion Sensor offers dimmability. [6] For a complete listing of Fifth Light products, visit www.eaton.com/lightingsystems [7] With integral test switch/indicator/laser test. For approximate delivered lumens multiply the lumens per watt of the desired fixture by the wattage of the emergency battery pack (100 lm/W x 7=700 lumens). IES-format photometry for luminaire under emergency operation available. [8] 2 ft. and 4 ft. only. [9] DesignLights Consortium™ Qualified and classified for DLC Standard (all lumen packages), refer to www.designlights.org for details. [10] 4100 lumen and above on 4 ft. and 8200 lumen and above on 8 ft. [11] HCD driver option requires two drivers for 6700 – 10,500 lumens. Not available for 13,000 lumens and above. [12] Not currently listed on DLC QPL. [13] Used to transfer fixture to secondary power source for life-safety operation. When used with a dimming fixture, two devices are required to ensure control is disabled while operating under emergency power. [14] 8 ft. only.

Specifications & dimensions subject to change without notice. Consult your Eaton Representative for availability and ordering information.

SHIPPING DATA

Length.	Wt.
2 ft.	4.3 lbs.
4 ft.	8.2 lbs.
8 ft.	15.1 lbs.

Powering Business Worldwide

Eaton
1121 Highway 74 South
Peachtree City, GA 30269
P: 770-486-4800
www.eaton.com/lighting

Specifications and dimensions subject to change without notice.

SPECIFICATIONS

LIGHTPLANE 1

LP1R | Recessed

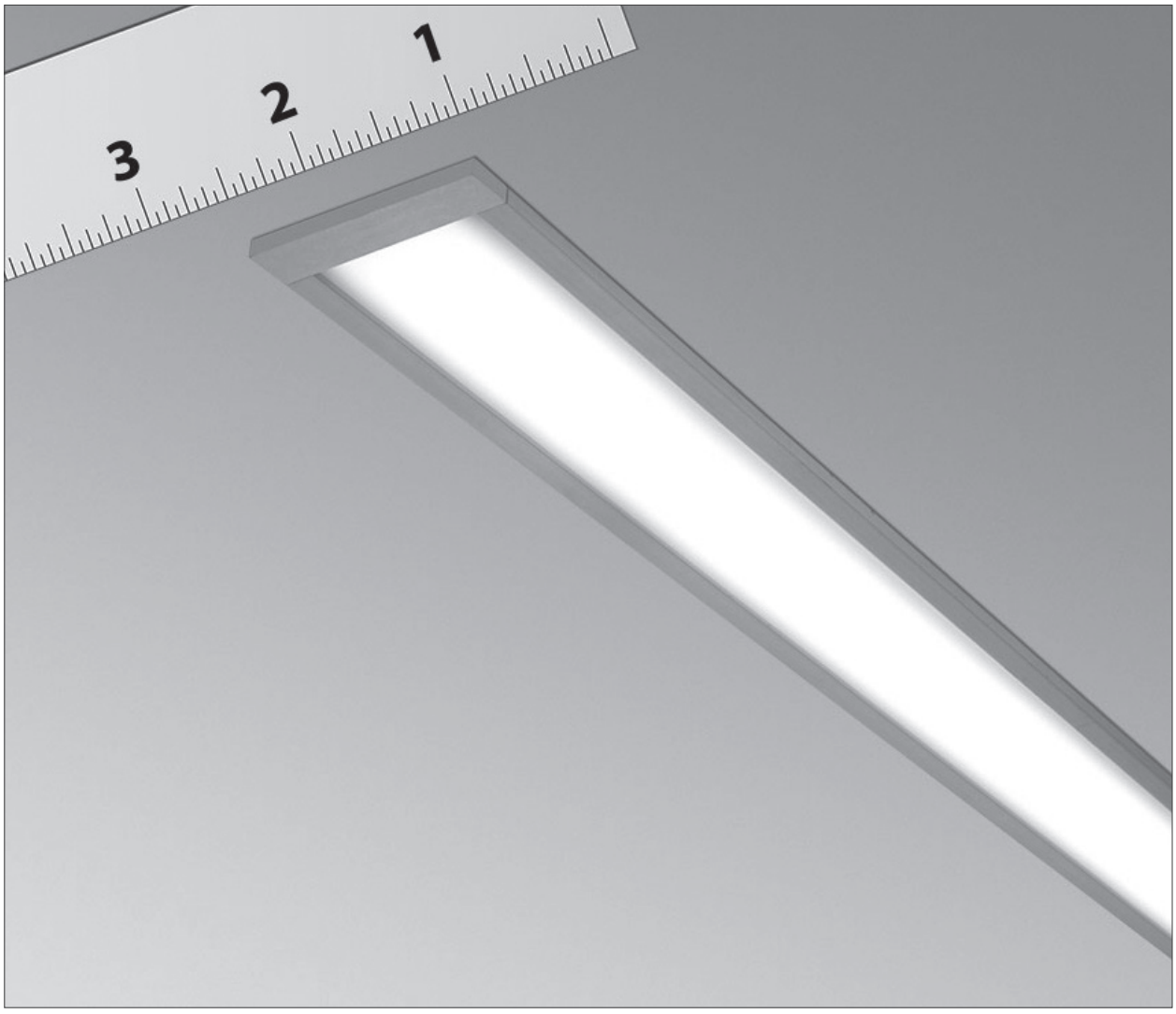

ALW
ARCHITECTURAL LIGHTING WORKS

Find additional images and information at
alwusa.com/lp1r

LIGHTPLANE 1 – LP1R
Recessed

1. BASE MODEL

LP1RT	1" recessed trimmed
LP1RMUD[1]	1" recessed trimless

[1]*Not available with DECOR lamping in Section 4*

2. RUN LENGTH/ SIZE

___	Individual (2', 3', 4', 5', 6', 7' or 8')
___	Continuous row or Configuration[2] *(enter total linear length, ex: 20')*

[2]*A configuration is a custom shape (rectangle square, L, etc.) with mitered corners. Must choose quantity of mitered corners in Additional Options.*

All lengths are nominal and may vary based on lamping and other specification selections. Consult factory when exact lengths are required.

3. CEILING TYPE

DRY	Drywall
TGRID	T-Grid
SLOT	Slot T-Bar
OTHER	Additional ceiling types may be available. Contact factory.

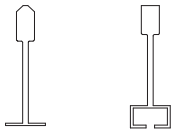

TGRID SLOT

4. LAMPING

LED[3]	*Pair lamping with CCT (where applicable), ex: MED/2700K*
LOW[4]	Low-output, high-performance LED – 397 delivered lm/ft, 7.2 W/lf, 55 lm/W **2700K 3000K 3500K 4000K**
MED	Medium-output, high performance LED – 529 delivered lm/ft, 9.6 W/lf, 55 lm/W **2700K 3000K 3500K 4000K**
HI[4]	High-output, high-performance LED – 661 delivered lm/ft, 12 W/lf, 55 lm/W **2700K 3000K 3500K 4000K**
DECOR1[4,5]	Decorative constant voltage LED, 194 delivered lm/ft, 5.9 W/lf, 33 lm/W **3000K 3500K 4000K**

[3]*LED board options may be limited and/or substituted to accommodate requests for exact, non-standard overall run lengths (ex: 3' 9"). Consult factory.*

[4]*Performance calculations are extrapolated estimates based on the actual IES test results of MED option at 3500K*

[5]*Not available with base model LP1RMUD in Section 1*

5. REMOTE DRIVER

0/10V/[6]	0-10V dimming *(Pair driver with dimming % below, ex: 0/10V/10%* **10%** Standard dimming to 10% **1%** Dimming to 1%
DALI[6]	DALI flicker-free dimming down to 0%
DMX[6]	DMX flicker-free dimming down to 0%
HILUME/A3[6]	Lutron® Hi-Lume™ A L3D Series EcoSystem® or 3-wire with flicker-free dimming down to 1%
NONDIM	Non-dimming driver

Driver option may be limited with 347 voltage. Consult factory.

[6]*When specified with LOW, MED or HI LEDs, perceptible shadowing will be visible on the lens surface when dimmed below 15%.*

© 2016 Architectural Lighting Works. Specifications subject to change without notice. Limited warranty. Complete terms available on website.

A 1035 22nd Avenue, Unit 1 · Oakland, CA 94606 P 510.489.2530 E TalkToUs@alwusa.com W alwusa.com

LIGHTPLANE 1 – LP1R
Recessed

6. LENS

EXT/F	Extra diffuse, flush lens
EXT/R	Extra diffuse, reveal *(extends below fixture by 1/4")*

7. FINISH

AL	Natural "Ultimatte" aluminum
BK	Black powdercoat
WH	White powdercoat
RAL/ ___	RAL powdercoat color (ex: RAL37)

8. VOLTAGE

120	120 volt
277	277 volt
UNV	Universal voltage
347[7]	347 volt

[7]*Driver/ballast options may be limited with 347 voltage. Consult factory.*

9. ADDITIONAL OPTIONS

EMB___[8]	Remote Emergency battery pack *(indicate total quantity, ex: EMB/4)*
EMC___[8]	Emergency circuit *(indicate total quantity, ex: EMC/4)*
ENLGHT/___[9,10,11]	Enlighted® remoted smart sensor *(occupancy, daylight, networking and more)*
OS/___[10]	0-10V remoted occupancy sensor *(indicate total quantity, ex: OS/4)*
PH___[10]	0-10V remoted photocell/daylight sensor *(indicate total quantity, ex: PH/4)*
MC/___	Mitered corners *(indicate total quantity, ex: MC/4 for a rectangle)*

[8]*Consult factory for available options*

[9]*Enlighted Gateway and Energy Manager (by others) plus programming required. Learn more at enlightedinc.com.*

[10]*Compatible with 0-10V driver only. Contact factory for alternative options.*

[11]*Select quantity of 1 for every 8 ft. (ex:ENLGHT3 for a 24' fixture run; OS4 for a 32' fixture run)*

DIMENSIONS

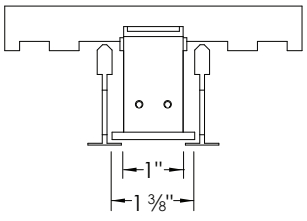

LP1RT
TGRID

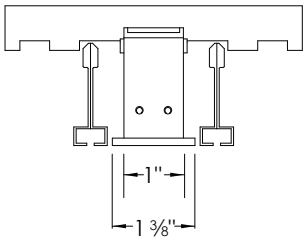

LP1RT
SLOT

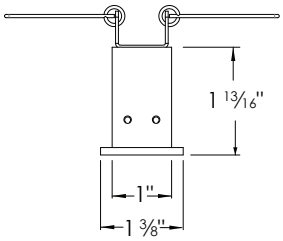

LP1RT
DRY

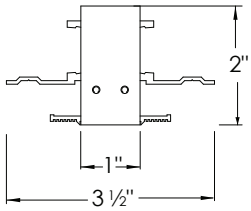

LP1RMUD
DRY

© 2016 Architectural Lighting Works. Specifications subject to change without notice. Limited warranty. Complete terms available on website.

A 1035 22nd Avenue, Unit 1 · Oakland, CA 94606 P 510.489.2530 E TalkToUs@alwusa.com W alwusa.com

LIGHTPLANE 1 – LP1R
Recessed

HOUSING

100% recyclable, extruded architectural grade T6061 aluminum with .08" minimum wall thickness.

ELECTRICAL

Class 2 remote drivers are provided with 10' plenum-rated cable. ETL listed for damp location.

EMERGENCY

Luminaires can be wired for emergency circuit. Emergency battery backup NOT available.

MITERED CORNERS

Consult factory for mitered corner angle options

LINEAR LENS OPTIONS

Extruded, twin-layered, high-impact acrylic. EXT is white and extra diffuse with minimal-to-no source visibility. Choose from flush or reveal (dropped).

FLUSH LENS – EXT/F

REVEAL LENS – EXT/R

FINISH

Standard finish is "Ultimatte" aluminum — a smooth, clean and durable finish achieved from a deep-etch and two-step clear anodizing process. White, black and color RAL powdercoat options also available.

"Ultimatte" Aluminum – AL

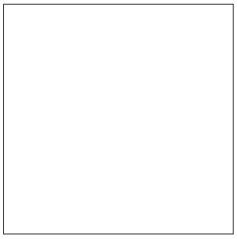

White – WH

Black – BK

Color – RAL

MAXIMUM REMOTE DRIVER DISTANCE*

Driver	18 Wire Gauge		18 Wire Gauge w/ Remote Emergency	
	LOW,MED,HI	DECOR	LOW,MED,HI	DECOR
0/10V/	120 ft	18 ft	10 ft	10ft
DALI DMX	72 ft	Consult Factory	10 ft	Consult Factory
HILUME/A3	22 ft	15 ft	10 ft	10 ft

* Maximum distance includes length of power feed cable suspended from remote driver to luminaire.

Ex: 72' max length - 3' suspension = 69' available to run from remote driver to building power.

© 2016 Architectural Lighting Works. Specifications subject to change without notice. Limited warranty. Complete terms available on website.

A 1035 22nd Avenue, Unit 1 · Oakland, CA 94606 P 510.489.2530 E TalkToUs@alwusa.com W alwusa.com

Neo-Ray

DESCRIPTION

The Define series by Neo-Ray characterizes the ultimate in minimalist simplicity by providing clean, uniform lines of illumination in virtually any architectural environment. Powered by Eaton's most advanced linear LED technology, the Define series delivers outstanding efficacy in a variety of profile widths. 1″, 2″, 3″, 4″ and 5″ luminaire widths are all specifiable to the nearest inch in length and can be fitted with standard flush, regress and drop lensing. In wall corners and wall to ceiling transitions can all be ordered as standard components and blend seamlessly into the most complex architectural spaces. Custom transitions are also available. Robust construction and adaptable, modular components make installation simple and ensure laser straight runs.

Catalog #		Type
Project		
Comments		Date
Prepared by		

SPECIFICATION FEATURES

Construction
Housing trim extruded from 6063 aluminum. Nominal 2′ -12′ illuminated sections. Used in run configuration and/or individual fixtures. All components are RoHs compliant.

Lens
Snap in lens available in flush and drop lens profiles. End brackets include closure to prevent moisture and insect ingress.

Finish
Fixture housing trims are high reflectance white using electrostatically applied polyester powder coat paint.

Mounting
Recessed.

Electrical
Long-life LED system coupled with electrical driver to deliver optimal performance. LED's are available in 2700K, 3000K, 3500K or 4000K with a typical CRI ≤ 85. Projected life is 60,000 hours at 86% lumen output. Electronic drivers are available for 120-277V applications. Fixtures and electrical components certified to UL and CUL standards. Fixtures are damp location listed and IC rated. For Chicago plenum, specify CP in fixture options.

Controls
Equipped standard with a 0-10V continuous dimming driver compatible with most standard dimming devices (refer to website for specific compatibility reference). Combine with FifthLight DALI and other energy saving products like sensors, daylighting controls and building management systems to maximize energy savings.

Warranty
Five year warranty.

DEFINE 2

LED

Recessed Perimeter
Direct

cULus – 1598
Damp Location Listed
LM79/LM80 Compliant
ROHS Compliant

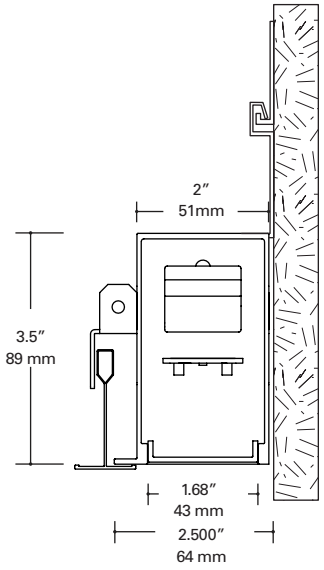

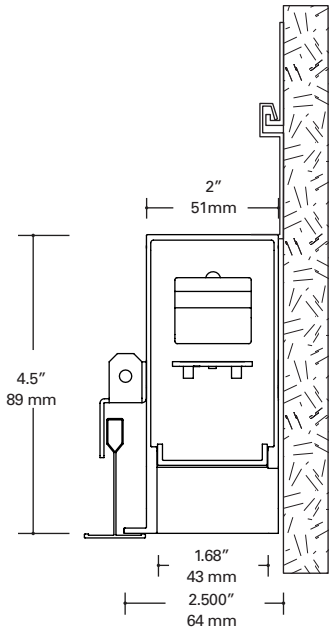

2.125″(54mm) cut-out for gypsum installation

ORDERING INFORMATION

Sample Number: S122-DRP-2-35-ETG-0048-1-U-DD-1-W

Series	Light Distribution	Light Level[1]	Color Temperature	Celing Type[2]	Length[3]
S122 = Define 2	**DRP** = Direct Recessed Perimeter **RDRP** = Regressed Direct Recessed Perimeter	**LO** = Light Level LO (1580 Lms @ 20W) (395 Lumens per ft @ 5W) **1** = Light Level 1 (2219 Lms @ 28W) (554 Lumens per ft @ 7W) **2** = Light Level 2 (3152 Lms @ 45W) (787 Lumens per ft @ 11.3W)	**27** = LED 2700K **30** = LED 3000K **35** = LED 3500K **40** = LED 4000K	**ETG** = 15/16″T-Grid **FTG** = 9/16″T-Grid **STG** = 9/16″ SlotT-Grid **ETT** = 15/16″TegularT-Grid **FTT** = 9/16″TegularT-Grid **GYP** = Gypsum board **FSR** = "Flangeless" Gypsum Board **FES** = "Finished" Extruded Side	**0024** = 2′ Individual[4] **0036** = 3′ Individual[4] **0048** = 4′ Individual **0072** = 6′ Individual **0096** = 8′ Individual **0144** = 12′ Individual **XXXX** = Configurable Run[5]

Circuiting	Voltage	Remote LED Driver	Emergency Options	Options[9]	Shielding	Color
1 = Single Circuit **2** = Dual Circuit	**1** = 120V **2** = 277V **U** = Universal (120V-277V) **3** = 347V[6]	**ED** = Non-Dimming **DD** = 0-10 Volt Dimming **5L** = DALI Dimming[7]	**B** = Battery Pack[8] **E** = Emergency **T** = Transfer Switch	**CP** = Chicago Plenum **SV** = Integrated Sensor **CR** = Corner	**1** = Satin Flush Diffuser **4** = Satin Drop Diffuser	**W** = Matte White **S** = Silver **B** = Black **C** = Custom Color

See page 5 for Technical Notes.
Specifications and dimensions subject to change without notice.
See additional information on the following pages.

All data certified to LM-79 standards in a NAVLAB approved testing facility

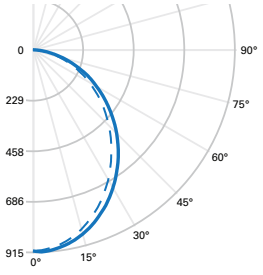

FILE NAME: S122-DR-1-35-ETG-0048-1-U-DD-1-W
CCT: 3500K
LUMENS: 2219 Lms
WATTS: 28 W
LPW: 79 LPW
TEST NUMBER: P33909

ZONAL LUMENS SUMMARY

Zone	Lumens	% Fixture
0°-30°	672	30
0°-40°	1071	48
0°-60°	1802	81
0°-90°	2219	100

LUMINANCE DATA (CD/M²)

Vertical Angle	0°	45°	90°
45°	12227	11566	11064
55°	11277	10602	10068
65°	10344	9504	8855
75°	8725	7853	7292
85°	6108	5367	4812

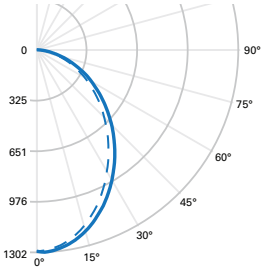

FILE NAME: S122-DR-2-35-ETG-0048-1-U-DD-1-W
CCT: 3500K
LUMENS: 3151 Lms
WATTS: 45 W
LPW: 70 LPW
TEST NUMBER: P33922

ZONAL LUMENS SUMMARY

Zone	Lumens	% Fixture
0°-30°	952	30
0°-40°	1517	48
0°-60°	2556	81
0°-90°	3151	100

LUMINANCE DATA (CD/M²)

Vertical Angle	0°	45°	90°
45°	17337	16402	15786
55°	16030	15074	14343
65°	14542	13550	12710
75°	12278	11218	10408
85°	8514	7588	7218

MOUNTING

Extruded Trim Flange Details - Refer to submittal drawings for detailed flange information - for additional options consult factory.

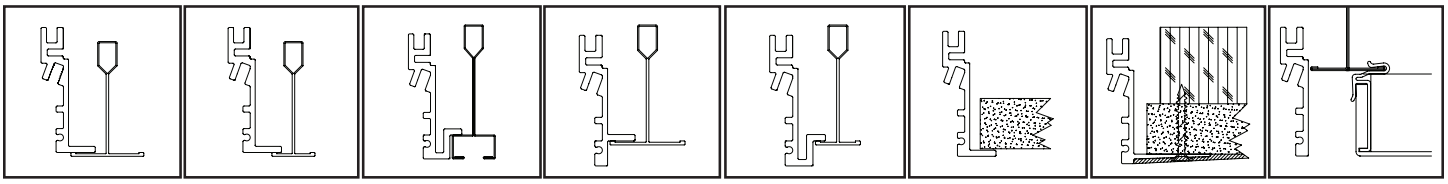

ETG 15/16" T-Grid | FTG 9/16" T-Grid | STG Slotted T-Grid | ETT 15/16" Tegular T-Grid | FTT 9/16" Tegular T-Grid | GYP Gypsum Board | FSR "Flangeless" Gypsum Board | FES Finished Extruded Side

MOUNTING *continued*

Mounting Information - Refer to installation instructions for detailed mounting information

2ft Individual (0024)

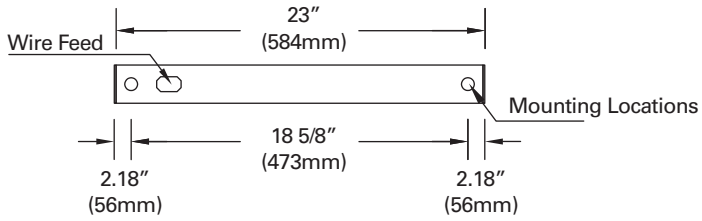

8ft Individual (0096)

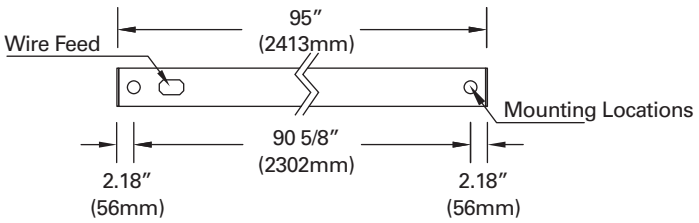

4ft Individual (0048)

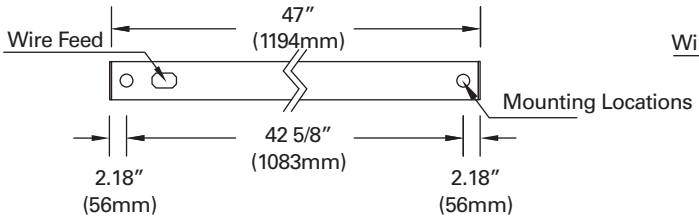

12ft Individual (0144)

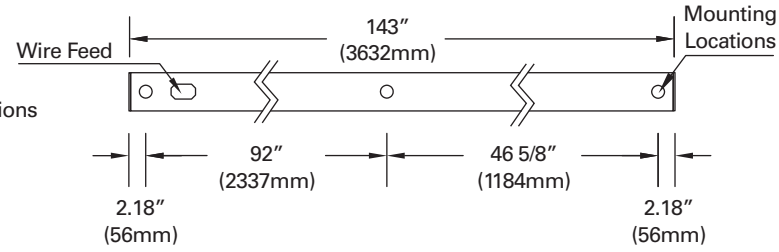

LENS DETAIL

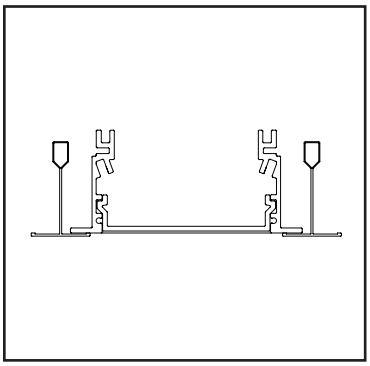

Flush Satin Lens

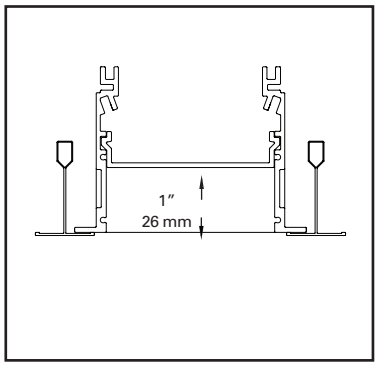

Regressed Satin Lens

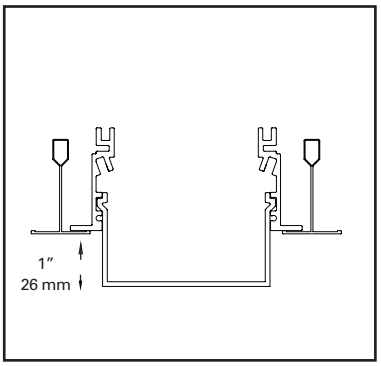

Satin Drop Down Lens

CORNER TRANSITIONS

Consult factory for precise corner locations and for ordering.

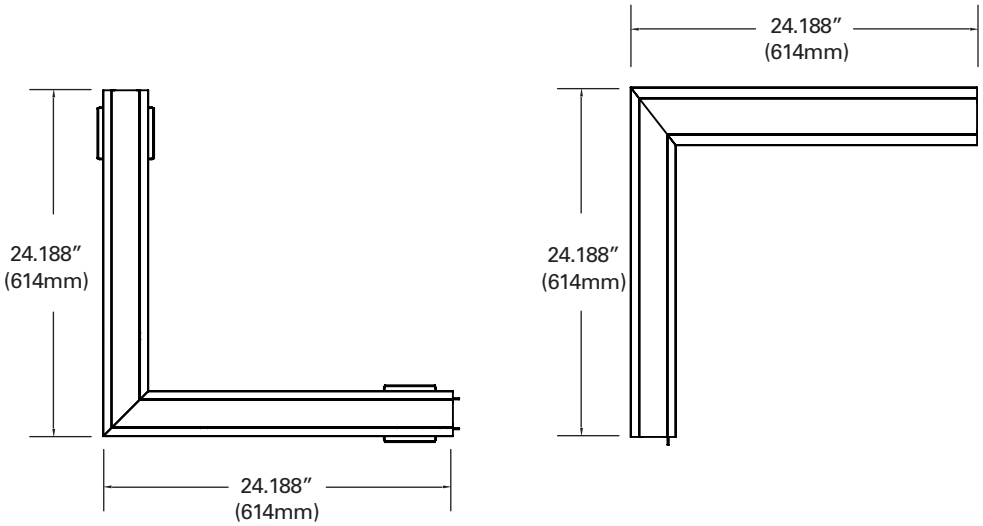

ALL GRIDTYPES SHOWN

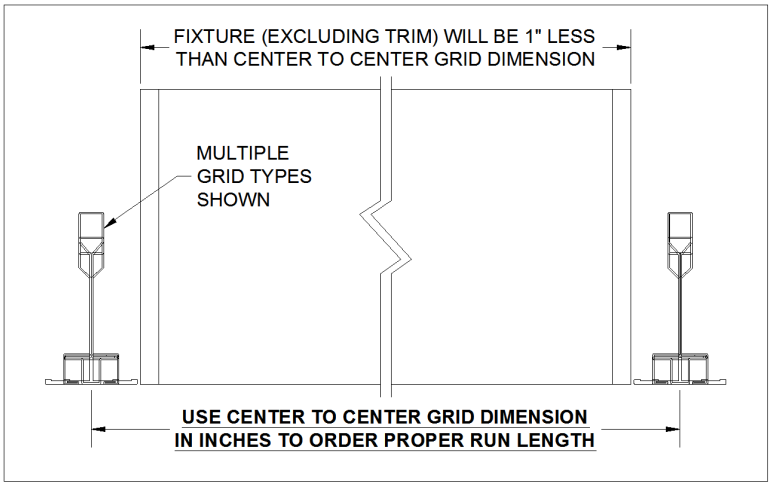

FSR: "FLANGELESS" GYPSUM BOARD

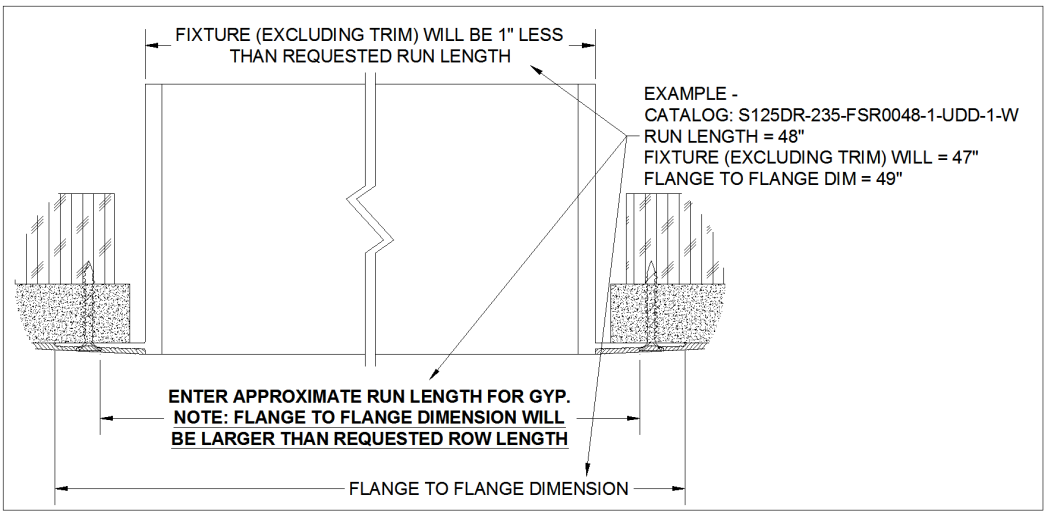

GYP: GYPSUM BOARD

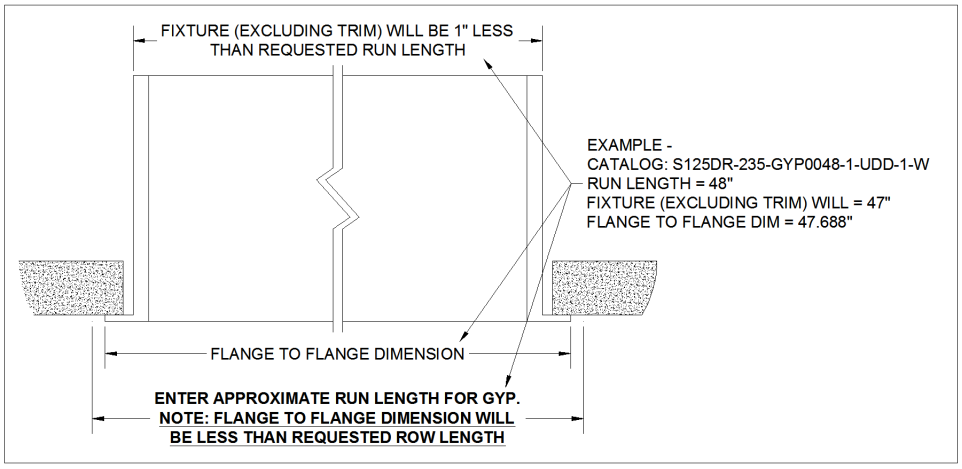

FES: “Finished” Extruded Sides

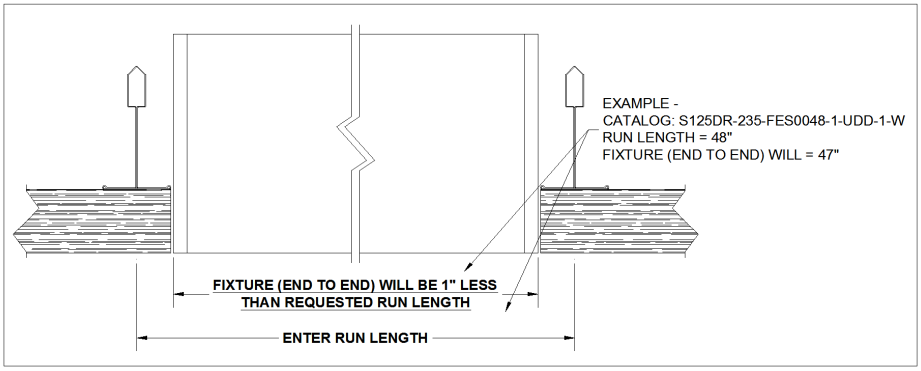

TECHNICAL NOTES

1. Additional lower light levels available. Please consult factory for specific details.
2. Not all ceiling types are shown; consult factory for specific ceiling types not listed.
3. All lengths are nominal. Actual sizes are one inch shorter than nominal to allow easy in-grid installation. For Gypsum or Flangeless installations add 1 inch to overall fixture length. Refer to submittal drawings for actual sizes. See “Ceiling Types” for example.
4. Not all dimming options available for every length; please consult factory for specific details.
5. For configurable runs specify length to nearest inch. Standard runs ship in 12ft increments. Ensure to specify 8ft increments if 12ft are too large to receive. Additional charges may apply; please consult factory for details.
6. 347V is achieved using remote transformer.
7. FifthLight DALI is achieved using digital analog converter.
8. Battery pack options are not available in every length; please consult factory for specific details. Battery pack is remote installation only.
9. For all options; consult factory for specific requirements.

DESCRIPTION

Portfolio

4 inch LED square recessed downlight designed for glare free, even illumination. Featuring a two-stage diffused reflector system producing smooth distribution with excellent light control and low aperture brightness. Lumen packages range from 1000 to 4000 with color temperatures of 2400K, 2700K, 3000K, 3500K, 4000K, and 5000K. Available with dim-to-warm technology – similar to halogen at full power, the 3000K LED warms smoothly as dimmed to 1850K creating a rich warm glow within the space.

Catalog #		Type
Project		
Comments		Date
Prepared by		

SPECIFICATION FEATURES

Lower Shielding Reflector
Painted die cast aluminum or anodized aluminum lower reflector with a lensed upper optical chamber providing superior lumen output with minimal source brightness. Anodized reflectors are offered in all Portfolio Alzak® finishes. Available with non-conductive polymer trim. Reflector is retained with two torsion springs holding the flange tight to the finished ceiling surface. Plaster lathing ring accessory offered for flush reflector transition.

Plaster Frame / Collar
Galvanized steel plaster frame with adjustable collar adjusts for up to 2" thick ceilings and rotates+/- 7.5°.

Universal Mounting Bracket
Accepts 1/2" EMT, C channel and bar hangers and adjusts 5" vertically from above and below the ceiling.

Junction Box
(4) 1/2" and (2) 3/4" trade size pry outs positioned to allow straight conduit runs. Listed for (8) #12 AWG (four in, four out) 90°C conductors and feed thru branch wiring and push in lever connectors.

Thermal
Aluminum heat sink conducts heat away from the LED module for optimal performance and long life.

LED
Chip on board with a multitude of highly efficient white LED's, combined with a high reflectance upper reflector and convex transitional lens produce even distribution with no pixilation. Rated for 50,000 hours at 70% lumen maintenance. Auto resetting, thermally protected, LED's are turned off when safe operating temperatures are exceeded. Color variation within 3-step MacAdam ellipses. Quick disconnect allows for tool-less replacement of LED engine from below ceiling. Available in 80, 90 or 97 CRI. D2W™ – dim-to-warm shifts CCT from 3000K to1850K as fixture dims mimicking halogen sources.

Driver
Standard 120-277V 0-10V dimming driver provides flicker free dimming from 100% to 1%. Optional 120-277V phase dimming, <1% 0-10V, Fifth Light, DMX or Lutron® Ecosystem. Driver can be serviced from above or through the aperture.

Code Compliance
Thermally protected and cULus listed for wet locations with covered ceiling. IP66 rated when used with IP66 gasket kit accessory. Optional City of Chicago environmental air (CCEA) marking for plenum applications. EMI/RFI emissions per FCC 47CFR Part 18 Class B consumer limits. 2000 lumen and above are non-IC rated - insulation must be kept 3" from top and sides of housing. IC rated up to 1500 lumens. RoHS Compliant. Photometric testing completed in accordance with IES LM 79 and TM-30 standards. LED life testing completed in accordance with LM 80 standards.

Warranty
5-year warranty

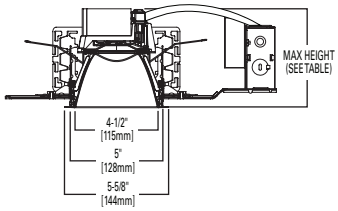

	1000-2000 LUMENS	3000-4000 LUMENS	5000-6000 LUMENS
STANDARD	5-3/8" [137mm]	5-3/8" [137mm]	7-1/8" [181mm]
SHALLOW	4-7/16" [113mm]	4-7/16" [113mm]	5-1/4" [133mm]

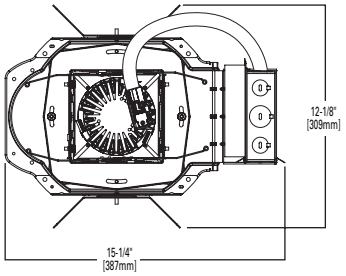

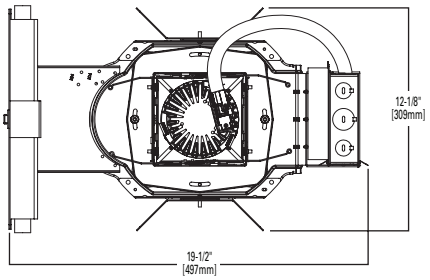

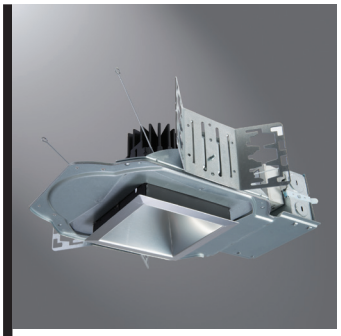

LDSQ4B EU4B 4LBSQ

1000, 1500, 2000, 3000, 4000 Lumens LED

Square Downlight

New Construction

D2W™

ENERGY STAR

Can be used to comply with T24 California Non-Residential Lighting Controls requirements

RoHS Compliant

Refer to ENERGY STAR® Qualified Products List. Can be used to comply with California Title 24 High Efficacy requirements.

ORDERING INFORMATION

SAMPLE NUMBER: LDSQ4B15D010EMBOD

Housing	Lumens[1]	Voltage	Driver	Options
LDSQ4B=LED Square Downlight 4" Nominal Aperture **LDSQ4BCP**=LED Square Downlight 4" Nominal Aperture, Chicago Plenum	**10**=1000 lumens **15**=1500 lumens **20**=2000 lumens **30**=3000 lumens **40**=4000 lumens	**Blank**=120-277V **3**=347V step down transformer	**1000 - 4000 Lumen** **D010**=0-10V Dimming, 1% to 100%, 120V-277V **D010TR**=0-10V or Line Voltage Dimming, 5% to 100%, 120V-277V **DE010**=0-10V Dimming, 0% to 100%, 120V-277V **D5LT**=Fifth Light® (DALI) Dimming, 0% to 100%, 120V-277V **DMX**=DMX Dimming, 0% to 100%, 120V-277V **DL2**=Lutron® Hi-Lume Forward Phase Dimming, 1% to 100%, 120V Only **DL3**=Lutron® Hi-Lume 3 Wire Dimming, 1% to 100%, 120V-277V **DLE**=Lutron Ecosystem dimming 1% to 100%, 120V-277V	**EMBOD**=Bodine® Emergency Module with Remote Test Switch[3] **EM7**=7W Emergency Module with Remote Test Switch[2, 6] **EM14**=14W Emergency Module with Remote Test Switch[2, 6]

SAMPLE NUMBER: EU4B10208035

Power Module	Lumen Levels[1]	CRI	Color		
			80 CRI	**90 CRI**	**97 CRI**
EU4B=4" Universal LED Module	**1020**=1000, 1500, 2000 lumens **3040**=3000-4000 lumens **1015IC**=1000, 1500 lumen IC rated	**80**=80 CRI Minimum **90**=90 CRI Minimum **97**=97 CRI Minimum	**27**=2700K **30**=3000K **35**=3500K **40**=4000K **50**=5000K	**24**=2400K **27**=2700K **30**=3000K **35**=3500K **40**=4000K **50**=5000K **30D2W**=1800-3000K Dim 2 Warm (2000 lumen and below, 90 CRI)	**27**=2700K **30**=3000K

SAMPLE NUMBER: 4LBSQ1LI

Trim	Distribution	Flange	Finish
4LB=4" LED	**SQ**=Square Anodized Aluminum **CSSQ**=Cast Shallow Square, Die Cast Aluminum **PSSQ**=Plastic Shallow Non-Conductive[5]	**0**=White Polymer Trim Ring **1**=Self-flanged **2**=White Painted Self-flanged	**LI**=Specular Clear[3] **H**=Semi-Specular Clear[3] **WMH**=Warm Haze[3] **WH**=Wheat[3] **GPH**=Graphite Haze[3] **B**=Specular Black[3] **MW**=Matte White **MB**=Matte Black[4] **MMS**=Matte Metallic Silver[4]

Accessories	Accessories
HB26=C-channel Bar Hanger, 26" Long, Pair **HB50**=C-channel Bar Hanger, 50" Long, Pair **RMB22**=Wood Joist Bar Hanger, 22" Long, Pair **H347**=347 to 120V Step Down Transformer, 75VA **H347200**=347 to 120V Step Down Transformer, 200VA **PORLWTPD1**=LumaWatt Pro wireless sensor kit (0-10V only)	**PRSQ4**=Plaster Lathing Ring for use with Rimless Flange **LGSKTSQ4IP66**=IP66 Gasket Kit

Notes:

1. Nominal Lumens will vary depending on selected color, driver and reflector finish.
2. UL/US approved only.
3. Available on anodized aluminum
4. Available on cast aluminum only
5. Matte white finish only
6. Not available with Chicago Plenum.

ENERGY

ENERGY DATA
Sound Rating: Class A standards
(Values at non-dimming line voltage)
Minimum Starting Temperature: -30°C (-22°F)
EMI/RFI: FCC Title 47 CFR, Part 15, Class B (Consumer)
Input Voltage: UNV (120V - 277V)
Power Factor: >0.90 (at nominal input 120-277 VAC & 100% of Rated Output Power)
Input Frequency: 50/60Hz

1000 Lumen D010		1500 Lumen D010	
Input Power: 11W	THD: <14%	Input Power: 15.5W	THD: <13%
120V Input Current: 0.09A	277V Input Current: 0.04A	120V Input Current: 0.13A	277V Input Current: 0.06A

2000 Lumen D010		3000 Lumen D010	
Input Power: 21.2W	THD: <9%	Input Power: 27.6W	THD: <10%
120V Input Current: 0.18A	277V Input Current: 0.08A	120V Input Current: 0.23A	277V Input Current: 0.10A

4000 Lumen D010	
Input Power: 41.6W	THD: <13%
120V Input Current: 0.35A	277V Input Current: 0.15A

	120V		277V	
Lumens	Inrush (A)	Duration (ms)	Inrush (A)	Duration (ms)
1000 Lumen D010	1.02	0.041	2.18	0.021
1500 Lumen D010	1.02	0.042	2.24	0.064
2000 Lumen D010	1.02	0.077	2.43	0.027
3000 Lumen D010	1.15	0.067	3.26	0.027
4000 Lumen D010	1.2	0.088	3.9	0.03

Powering Business Worldwide

Eaton
1121 Highway 74 South
Peachtree City, GA 30269
P: 770-486-4800
www.eaton.com/lighting

Specifications and dimensions subject to change without notice.

PHOTOMETRY

Test Number	P35089
Housing	LDSQ4B15D010
Module	EU4B10208035
Trim	4LBCSSQ1MMS
Lumens	1504
Efficacy	107.4 Lm/W
SC	1.19

CANDLEPOWER DISTRIBUTION

Downlight

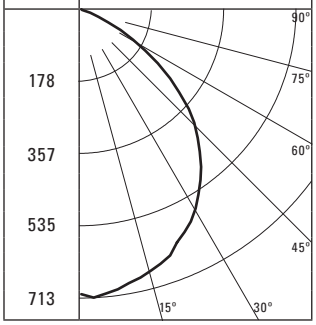

CONE OF LIGHT

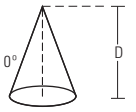

D	FC	L	W
5.5'	24	6.4	6.4
7'	15	8.2	8.2
8'	11	9.4	9.4
9'	9	10.6	10.6
10'	7	11.8	11.8
12'	5	14.2	14.2

CANDELA TABLE

Degrees Vertical	Candela
0	704
5	690
15	663
25	605
35	515
45	401
55	232
65	76
75	2
85	0
90	0

ZONAL LUMEN SUMMARY

Zone	Lumens	% Fixture
0-30	534	35.5
0-40	857	57
0-60	1395	92.7
0-90	1504	100
90-180	0	0
0-180	1504	100

LUMINANCE

Average Candela Degrees	Average 0° Luminance
45	43408
55	30960
65	13765
75	591
85	0

Test Number	P35088
Housing	LDSQ4B15D010
Module	EU4B10208035
Trim	4LBSQ1LI
Lumens	1453
Efficacy	103.8 Lm/W
SC	0.91

CANDLEPOWER DISTRIBUTION

Downlight

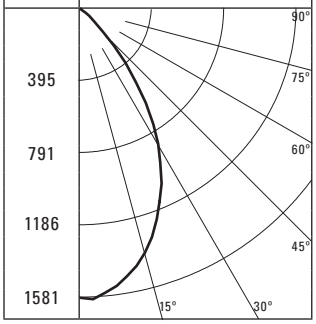

CONE OF LIGHT

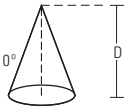

D	FC	L	W
5.5'	52	4.8	4.8
7'	32	6.2	6.2
8'	25	7.2	7.2
9'	20	8	8
10'	16	9	9
12'	11	10.8	10.8

CANDELA TABLE

Degrees Vertical	Candela
0	1574
5	1550
15	1364
25	1017
35	440
45	97
55	14
65	4
75	1
85	0
90	0

ZONAL LUMEN SUMMARY

Zone	Lumens	% Fixture
0-30	996	68.5
0-40	1322	91
0-60	1447	99.5
0-90	1453	100
90-180	0	0
0-180	1453	100

LUMINANCE

Average Candela Degrees	Average 0° Luminance
45	10500
55	1868
65	724
75	296
85	0

Test Number	P202481
Housing	LDSQ4B40D010
Module	EU4B30508035
Trim	4LBCSSQ1MMS
Lumens	4110
Efficacy	95.5 Lm/W
SC	1.19

CANDLEPOWER DISTRIBUTION

Downlight

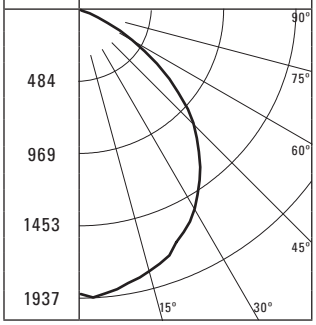

CONE OF LIGHT

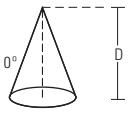

D	FC	L	W
5.5'	64	6.4	6.4
7'	40	8.2	8.2
8'	30	9.4	9.4
9'	24	10.6	10.6
10'	19	11.8	11.8
12'	14	14.2	14.2

CANDELA TABLE

Degrees Vertical	Candela
0	1924
5	1886
15	1812
25	1653
35	1408
45	1096
55	634
65	208
75	6
85	0
90	0

ZONAL LUMEN SUMMARY

Zone	Lumens	% Fixture
0-30	1458	35.5
0-40	2342	57
0-60	3812	92.7
0-90	4110	100
90-180	0	0
0-180	4110	100

LUMINANCE

Average Candela Degrees	Average 0° Luminance
45	18216
55	15774
65	10088
75	2368
85	0

Test Number	P202480
Housing	LDSQ4B40D010
Module	EU4B30508035
Trim	4LBSQ1LI
Lumens	3970
Efficacy	92.3 Lm/W
SC	0.91

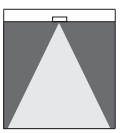

CANDLEPOWER DISTRIBUTION

Downlight

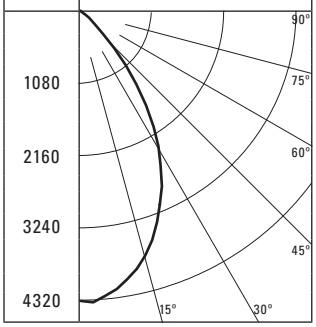

CONE OF LIGHT

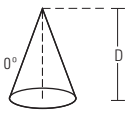

D	FC	L	W
5.5'	142	4.8	4.8
7'	88	6.2	6.2
8'	67	7.2	7.2
9'	53	8	8
10'	43	9	9
12'	30	10.8	10.8

CANDELA TABLE

Degrees Vertical	Candela
0	4301
5	4235
15	3727
25	2779
35	1202
45	265
55	38
65	11
75	3
85	0
90	0

ZONAL LUMEN SUMMARY

Zone	Lumens	% Fixture
0-30	2720	68.5
0-40	3613	91
0-60	3952	99.5
0-90	3970	100
90-180	0	0
0-180	3970	100

LUMINANCE

Average Candela Degrees	Average 0° Luminance
45	4058
55	723
65	279
75	113
85	0

Powering Business Worldwide

Eaton
1121 Highway 74 South
Peachtree City, GA 30269
P: 770-486-4800
www.eaton.com/lighting

Specifications and dimensions subject to change without notice.

DESCRIPTION

Portfolio

4 inch LED square recessed downlight designed for glare free, even illumination. Featuring a two-stage diffused reflector system producing smooth distribution with excellent light control and low aperture brightness. Lumen packages range from 1000 to 4000 with color temperatures of 2400K, 2700K, 3000K, 3500K, 4000K, and 5000K. Available with dim-to-warm technology – similar to halogen at full power, the 3000K LED warms smoothly as dimmed to 1850K creating a rich warm glow within the space.

Catalog #		Type
Project		
Comments		Date
Prepared by		

SPECIFICATION FEATURES

Lower Shielding Reflector
Painted die cast aluminum or anodized aluminum lower reflector with a lensed upper optical chamber providing superior lumen output with minimal source brightness. Anodized reflectors are offered in all Portfolio Alzak® finishes. Available with non-conductive polymer trim. Reflector is retained with two torsion springs holding the flange tight to the finished ceiling surface. Plaster lathing ring accessory offered for flush reflector transition.

Plaster Frame / Collar
Galvanized steel plaster frame with adjustable collar adjusts for up to 2" thick ceilings and rotates+/- 7.5°.

Universal Mounting Bracket
Accepts 1/2" EMT, C channel and bar hangers and adjusts 5" vertically from above and below the ceiling.

Junction Box
(4) 1/2" and (2) 3/4" trade size pry outs positioned to allow straight conduit runs. Listed for (8) #12 AWG (four in, four out) 90°C conductors and feed thru branch wiring and push in lever connectors.

Thermal
Aluminum heat sink conducts heat away from the LED module for optimal performance and long life.

LED
Chip on board with a multitude of highly efficient white LED's, combined with a high reflectance upper reflector and convex transitional lens produce even distribution with no pixilation. Rated for 50,000 hours at 70% lumen maintenance. Auto resetting, thermally protected, LED's are turned off when safe operating temperatures are exceeded. Color variation within 3-step MacAdam ellipses. Quick disconnect allows for tool-less replacement of LED engine from below ceiling. Available in 80, 90 or 97 CRI. D2W™ – dim-to-warm shifts CCT from 3000K to1850K as fixture dims mimicking halogen sources.

Driver
Standard 120-277V 0-10V dimming driver provides flicker free dimming from 100% to 1%. Optional 120-277V phase dimming, <1% 0-10V, Fifth Light, DMX or Lutron® Ecosystem. Driver can be serviced from above or through the aperture.

Code Compliance
Thermally protected and cULus listed for wet locations with covered ceiling. IP66 rated when used with IP66 gasket kit accessory. Optional City of Chicago environmental air (CCEA) marking for plenum applications. EMI/RFI emissions per FCC 47CFR Part 18 Class B consumer limits. 2000 lumen and above are non-IC rated - insulation must be kept 3" from top and sides of housing. IC rated up to 1500 lumens. RoHS Compliant. Photometric testing completed in accordance with IES LM 79 and TM-30 standards. LED life testing completed in accordance with LM 80 standards.

Warranty
5-year warranty

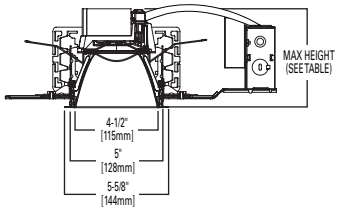

	1000-2000 LUMENS	3000-4000 LUMENS	5000-6000 LUMENS
STANDARD	5-3/8" [137mm]	5-3/8" [137mm]	7-1/8" [181mm]
SHALLOW	4-7/16" [113mm]	4-7/16" [113mm]	5-1/4" [133mm]

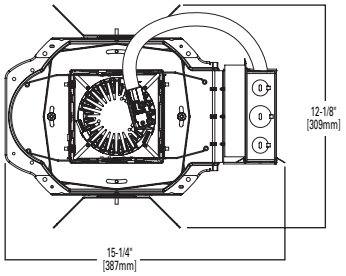

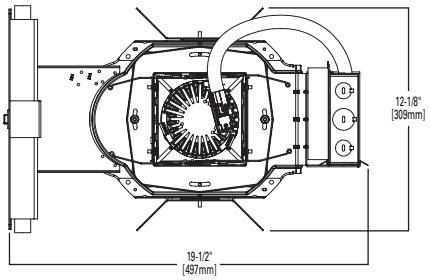

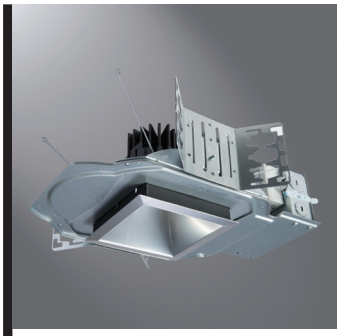

LDSQ4B EU4B 4LBSQ

1000, 1500, 2000, 3000, 4000 Lumens LED

Square Downlight

New Construction

D2W™

ENERGY STAR

Can be used to comply with T24 California Non-Residential Lighting Controls requirements

RoHS Compliant

Refer to ENERGY STAR® Qualified Products List. Can be used to comply with California Title 24 High Efficacy requirements.

ORDERING INFORMATION

SAMPLE NUMBER: LDSQ4B15D010EMBOD

Housing	Lumens[1]	Voltage	Driver	Options
LDSQ4B=LED Square Downlight 4" Nominal Aperture **LDSQ4BCP**=LED Square Downlight 4" Nominal Aperture, Chicago Plenum	**10**=1000 lumens **15**=1500 lumens **20**=2000 lumens **30**=3000 lumens **40**=4000 lumens	**Blank**=120-277V **3**=347V step down transformer	**1000 - 4000 Lumen** **D010**=0-10V Dimming, 1% to 100%, 120V-277V **D010TR**=0-10V or Line Voltage Dimming, 5% to 100%, 120V-277V **DE010**=0-10V Dimming, 0% to 100%, 120V-277V **D5LT**=Fifth Light® (DALI) Dimming, 0% to 100%, 120V-277V **DMX**=DMX Dimming, 0% to 100%, 120V-277V **DL2**=Lutron® Hi-Lume Forward Phase Dimming, 1% to 100%, 120V Only **DL3**=Lutron® Hi-Lume 3 Wire Dimming, 1% to 100%, 120V-277V **DLE**=Lutron Ecosystem dimming 1% to 100%, 120V-277V	**EMBOD**=Bodine® Emergency Module with Remote Test Switch[3] **EM7**=7W Emergency Module with Remote Test Switch[2, 6] **EM14**=14W Emergency Module with Remote Test Switch[2, 6]

SAMPLE NUMBER: EU4B10208035

Power Module	Lumen Levels[1]	CRI	Color		
			80 CRI	**90 CRI**	**97 CRI**
EU4B=4" Universal LED Module	**1020**=1000, 1500, 2000 lumens **3040**=3000-4000 lumens **1015IC**=1000, 1500 lumen IC rated	**80**=80 CRI Minimum **90**=90 CRI Minimum **97**=97 CRI Minimum	**27**=2700K **30**=3000K **35**=3500K **40**=4000K **50**=5000K	**24**=2400K **27**=2700K **30**=3000K **35**=3500K **40**=4000K **50**=5000K **30D2W**=1800-3000K Dim 2 Warm (2000 lumen and below, 90 CRI)	**27**=2700K **30**=3000K

SAMPLE NUMBER: 4LBSQ1LI

Trim	Distribution	Flange	Finish
4LB=4" LED	**SQ**=Square Anodized Aluminum **CSSQ**=Cast Shallow Square, Die Cast Aluminum **PSSQ**=Plastic Shallow Non-Conductive[5]	**0**=White Polymer Trim Ring **1**=Self-flanged **2**=White Painted Self-flanged	**LI**=Specular Clear[3] **H**=Semi-Specular Clear[3] **WMH**=Warm Haze[3] **WH**=Wheat[3] **GPH**=Graphite Haze[3] **B**=Specular Black[3] **MW**=Matte White **MB**=Matte Black[4] **MMS**=Matte Metallic Silver[4]

Accessories	Accessories
HB26=C-channel Bar Hanger, 26" Long, Pair **HB50**=C-channel Bar Hanger, 50" Long, Pair **RMB22**=Wood Joist Bar Hanger, 22" Long, Pair **H347**=347 to 120V Step Down Transformer, 75VA **H347200**=347 to 120V Step Down Transformer, 200VA **PORLWTPD1**=LumaWatt Pro wireless sensor kit (0-10V only)	**PRSQ4**=Plaster Lathing Ring for use with Rimless Flange **LGSKTSQ4IP66**=IP66 Gasket Kit

Notes:

1. Nominal Lumens will vary depending on selected color, driver and reflector finish.
2. UL/US approved only.
3. Available on anodized aluminum
4. Available on cast aluminum only
5. Matte white finish only
6. Not available with Chicago Plenum.

ENERGY

ENERGY DATA
Sound Rating: Class A standards
(Values at non-dimming line voltage)
Minimum Starting Temperature: -30°C (-22°F)
EMI/RFI: FCC Title 47 CFR, Part 15, Class B (Consumer)
Input Voltage: UNV (120V - 277V)
Power Factor: >0.90 (at nominal input 120-277 VAC & 100% of Rated Output Power)
Input Frequency: 50/60Hz

1000 Lumen D010		1500 Lumen D010	
Input Power: 11W	THD: <14%	Input Power: 15.5W	THD: <13%
120V Input Current: 0.09A	277V Input Current: 0.04A	120V Input Current: 0.13A	277V Input Current: 0.06A

2000 Lumen D010		3000 Lumen D010	
Input Power: 21.2W	THD: <9%	Input Power: 27.6W	THD: <10%
120V Input Current: 0.18A	277V Input Current: 0.08A	120V Input Current: 0.23A	277V Input Current: 0.10A

4000 Lumen D010	
Input Power: 41.6W	THD: <13%
120V Input Current: 0.35A	277V Input Current: 0.15A

	120V		277V	
Lumens	Inrush (A)	Duration (ms)	Inrush (A)	Duration (ms)
1000 Lumen D010	1.02	0.041	2.18	0.021
1500 Lumen D010	1.02	0.042	2.24	0.064
2000 Lumen D010	1.02	0.077	2.43	0.027
3000 Lumen D010	1.15	0.067	3.26	0.027
4000 Lumen D010	1.2	0.088	3.9	0.03

Powering Business Worldwide

Eaton
1121 Highway 74 South
Peachtree City, GA 30269
P: 770-486-4800
www.eaton.com/lighting

Specifications and dimensions subject to change without notice.

PHOTOMETRY

Test Number	P35089
Housing	LDSQ4B15D010
Module	EU4B10208035
Trim	4LBCSSQ1MMS
Lumens	1504
Efficacy	107.4 Lm/W
SC	1.19

CANDLEPOWER DISTRIBUTION

Downlight

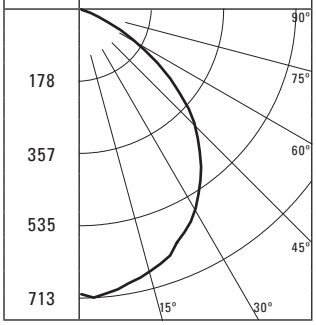

CONE OF LIGHT

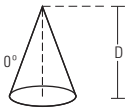

D	FC	L	W
5.5'	24	6.4	6.4
7'	15	8.2	8.2
8'	11	9.4	9.4
9'	9	10.6	10.6
10'	7	11.8	11.8
12'	5	14.2	14.2

CANDELA TABLE

Degrees Vertical	Candela
0	704
5	690
15	663
25	605
35	515
45	401
55	232
65	76
75	2
85	0
90	0

ZONAL LUMEN SUMMARY

Zone	Lumens	% Fixture
0-30	534	35.5
0-40	857	57
0-60	1395	92.7
0-90	1504	100
90-180	0	0
0-180	1504	100

LUMINANCE

Average Candela Degrees	Average 0° Luminance
45	43408
55	30960
65	13765
75	591
85	0

Test Number	P35088
Housing	LDSQ4B15D010
Module	EU4B10208035
Trim	4LBSQ1LI
Lumens	1453
Efficacy	103.8 Lm/W
SC	0.91

CANDLEPOWER DISTRIBUTION

Downlight

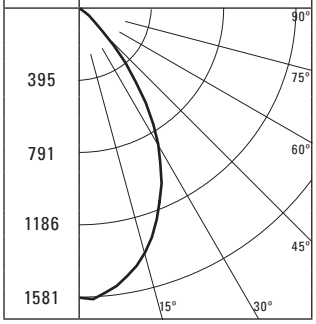

CONE OF LIGHT

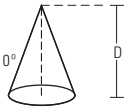

D	FC	L	W
5.5'	52	4.8	4.8
7'	32	6.2	6.2
8'	25	7.2	7.2
9'	20	8	8
10'	16	9	9
12'	11	10.8	10.8

CANDELA TABLE

Degrees Vertical	Candela
0	1574
5	1550
15	1364
25	1017
35	440
45	97
55	14
65	4
75	1
85	0
90	0

ZONAL LUMEN SUMMARY

Zone	Lumens	% Fixture
0-30	996	68.5
0-40	1322	91
0-60	1447	99.5
0-90	1453	100
90-180	0	0
0-180	1453	100

LUMINANCE

Average Candela Degrees	Average 0° Luminance
45	10500
55	1868
65	724
75	296
85	0

Test Number	P202481
Housing	LDSQ4B40D010
Module	EU4B30508035
Trim	4LBCSSQ1MMS
Lumens	4110
Efficacy	95.5 Lm/W
SC	1.19

CANDLEPOWER DISTRIBUTION

Downlight

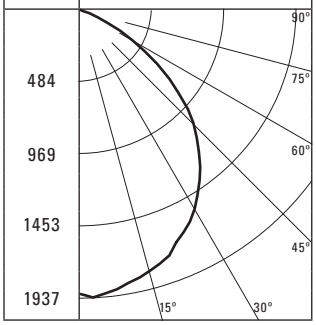

CONE OF LIGHT

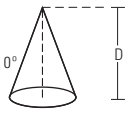

D	FC	L	W
5.5'	64	6.4	6.4
7'	40	8.2	8.2
8'	30	9.4	9.4
9'	24	10.6	10.6
10'	19	11.8	11.8
12'	14	14.2	14.2

CANDELA TABLE

Degrees Vertical	Candela
0	1924
5	1886
15	1812
25	1653
35	1408
45	1096
55	634
65	208
75	6
85	0
90	0

ZONAL LUMEN SUMMARY

Zone	Lumens	% Fixture
0-30	1458	35.5
0-40	2342	57
0-60	3812	92.7
0-90	4110	100
90-180	0	0
0-180	4110	100

LUMINANCE

Average Candela Degrees	Average 0° Luminance
45	18216
55	15774
65	10088
75	2368
85	0

Test Number	P202480
Housing	LDSQ4B40D010
Module	EU4B30508035
Trim	4LBSQ1LI
Lumens	3970
Efficacy	92.3 Lm/W
SC	0.91

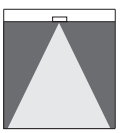

CANDLEPOWER DISTRIBUTION

Downlight

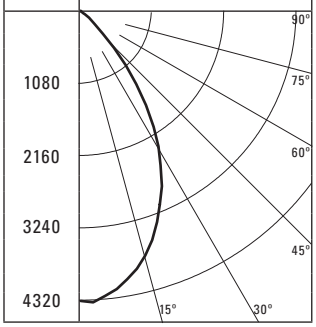

CONE OF LIGHT

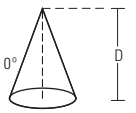

D	FC	L	W
5.5'	142	4.8	4.8
7'	88	6.2	6.2
8'	67	7.2	7.2
9'	53	8	8
10'	43	9	9
12'	30	10.8	10.8

CANDELA TABLE

Degrees Vertical	Candela
0	4301
5	4235
15	3727
25	2779
35	1202
45	265
55	38
65	11
75	3
85	0
90	0

ZONAL LUMEN SUMMARY

Zone	Lumens	% Fixture
0-30	2720	68.5
0-40	3613	91
0-60	3952	99.5
0-90	3970	100
90-180	0	0
0-180	3970	100

LUMINANCE

Average Candela Degrees	Average 0° Luminance
45	4058
55	723
65	279
75	113
85	0

Powering Business Worldwide

Eaton
1121 Highway 74 South
Peachtree City, GA 30269
P: 770-486-4800
www.eaton.com/lighting

Specifications and dimensions subject to change without notice.

DESCRIPTION

Portfolio

4 inch LED square recessed downlight designed for glare free, even illumination. Featuring a two-stage diffused reflector system producing smooth distribution with excellent light control and low aperture brightness. Lumen packages range from 1000 to 4000 with color temperatures of 2400K, 2700K, 3000K, 3500K, 4000K, and 5000K. Available with dim-to-warm technology – similar to halogen at full power, the 3000K LED warms smoothly as dimmed to 1850K creating a rich warm glow within the space.

Catalog #		Type
Project		
Comments		Date
Prepared by		

SPECIFICATION FEATURES

Lower Shielding Reflector
Painted die cast aluminum or anodized aluminum lower reflector with a lensed upper optical chamber providing superior lumen output with minimal source brightness. Anodized reflectors are offered in all Portfolio Alzak® finishes. Available with non-conductive polymer trim. Reflector is retained with two torsion springs holding the flange tight to the finished ceiling surface. Plaster lathing ring accessory offered for flush reflector transition.

Plaster Frame / Collar
Galvanized steel plaster frame with adjustable collar adjusts for up to 2" thick ceilings and rotates+/- 7.5°.

Universal Mounting Bracket
Accepts 1/2" EMT, C channel and bar hangers and adjusts 5" vertically from above and below the ceiling.

Junction Box
(4) 1/2" and (2) 3/4" trade size pry outs positioned to allow straight conduit runs. Listed for (8) #12 AWG (four in, four out) 90°C conductors and feed thru branch wiring and push in lever connectors.

Thermal
Aluminum heat sink conducts heat away from the LED module for optimal performance and long life.

LED
Chip on board with a multitude of highly efficient white LED's, combined with a high reflectance upper reflector and convex transitional lens produce even distribution with no pixilation. Rated for 50,000 hours at 70% lumen maintenance. Auto resetting, thermally protected, LED's are turned off when safe operating temperatures are exceeded. Color variation within 3-step MacAdam ellipses. Quick disconnect allows for tool-less replacement of LED engine from below ceiling. Available in 80, 90 or 97 CRI. D2W™ – dim-to-warm shifts CCT from 3000K to1850K as fixture dims mimicking halogen sources.

Driver
Standard 120-277V 0-10V dimming driver provides flicker free dimming from 100% to 1%. Optional 120-277V phase dimming, <1% 0-10V, Fifth Light, DMX or Lutron® Ecosystem. Driver can be serviced from above or through the aperture.

Code Compliance
Thermally protected and cULus listed for wet locations with covered ceiling. IP66 rated when used with IP66 gasket kit accessory. Optional City of Chicago environmental air (CCEA) marking for plenum applications. EMI/RFI emissions per FCC 47CFR Part 18 Class B consumer limits. 2000 lumen and above are non-IC rated - insulation must be kept 3" from top and sides of housing. IC rated up to 1500 lumens. RoHS Compliant. Photometric testing completed in accordance with IES LM 79 and TM-30 standards. LED life testing completed in accordance with LM 80 standards.

Warranty
5-year warranty

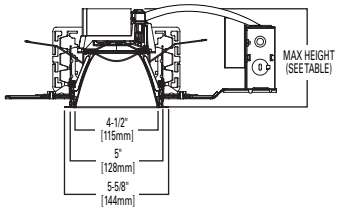

	1000-2000 LUMENS	3000-4000 LUMENS	5000-6000 LUMENS
STANDARD	5-3/8" [137mm]	5-3/8" [137mm]	7-1/8" [181mm]
SHALLOW	4-7/16" [113mm]	4-7/16" [113mm]	5-1/4" [133mm]

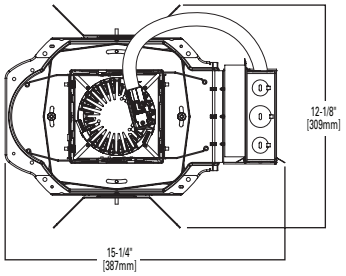

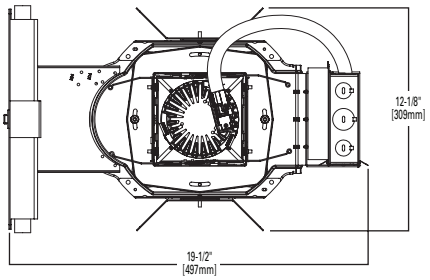

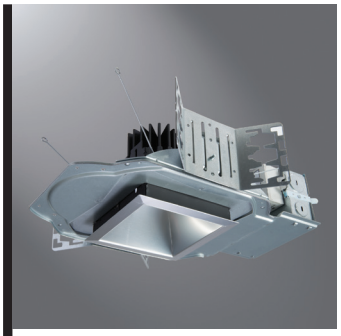

LDSQ4B EU4B 4LBSQ

1000, 1500, 2000, 3000, 4000 Lumens LED

Square Downlight

New Construction

D2W™

ENERGY STAR

Can be used to comply with T24 California Non-Residential Lighting Controls requirements

RoHS Compliant

Refer to ENERGY STAR® Qualified Products List. Can be used to comply with California Title 24 High Efficacy requirements.

ORDERING INFORMATION

SAMPLE NUMBER: LDSQ4B15D010EMBOD

Housing	Lumens[1]	Voltage	Driver	Options
LDSQ4B=LED Square Downlight 4" Nominal Aperture **LDSQ4BCP**=LED Square Downlight 4" Nominal Aperture, Chicago Plenum	**10**=1000 lumens **15**=1500 lumens **20**=2000 lumens **30**=3000 lumens **40**=4000 lumens	**Blank**=120-277V **3**=347V step down transformer	**1000 - 4000 Lumen** **D010**=0-10V Dimming, 1% to 100%, 120V-277V **D010TR**=0-10V or Line Voltage Dimming, 5% to 100%, 120V-277V **DE010**=0-10V Dimming, 0% to 100%, 120V-277V **D5LT**=Fifth Light® (DALI) Dimming, 0% to 100%, 120V-277V **DMX**=DMX Dimming, 0% to 100%, 120V-277V **DL2**=Lutron® Hi-Lume Forward Phase Dimming, 1% to 100%, 120V Only **DL3**=Lutron® Hi-Lume 3 Wire Dimming, 1% to 100%, 120V-277V **DLE**=Lutron Ecosystem dimming 1% to 100%, 120V-277V	**EMBOD**=Bodine® Emergency Module with Remote Test Switch[3] **EM7**=7W Emergency Module with Remote Test Switch[2, 6] **EM14**=14W Emergency Module with Remote Test Switch[2, 6]

SAMPLE NUMBER: EU4B10208035

Power Module	Lumen Levels[1]	CRI	Color		
			80 CRI	**90 CRI**	**97 CRI**
EU4B=4" Universal LED Module	**1020**=1000, 1500, 2000 lumens **3040**=3000-4000 lumens **1015IC**=1000, 1500 lumen IC rated	**80**=80 CRI Minimum **90**=90 CRI Minimum **97**=97 CRI Minimum	**27**=2700K **30**=3000K **35**=3500K **40**=4000K **50**=5000K	**24**=2400K **27**=2700K **30**=3000K **35**=3500K **40**=4000K **50**=5000K **30D2W**=1800-3000K Dim 2 Warm (2000 lumen and below, 90 CRI)	**27**=2700K **30**=3000K

SAMPLE NUMBER: 4LBSQ1LI

Trim	Distribution	Flange	Finish
4LB=4" LED	**SQ**=Square Anodized Aluminum **CSSQ**=Cast Shallow Square, Die Cast Aluminum **PSSQ**=Plastic Shallow Non-Conductive[5]	**0**=White Polymer Trim Ring **1**=Self-flanged **2**=White Painted Self-flanged	**LI**=Specular Clear[3] **H**=Semi-Specular Clear[3] **WMH**=Warm Haze[3] **WH**=Wheat[3] **GPH**=Graphite Haze[3] **B**=Specular Black[3] **MW**=Matte White **MB**=Matte Black[4] **MMS**=Matte Metallic Silver[4]

Accessories	Accessories
HB26=C-channel Bar Hanger, 26" Long, Pair **HB50**=C-channel Bar Hanger, 50" Long, Pair **RMB22**=Wood Joist Bar Hanger, 22" Long, Pair **H347**=347 to 120V Step Down Transformer, 75VA **H347200**=347 to 120V Step Down Transformer, 200VA **PORLWTPD1**=LumaWatt Pro wireless sensor kit (0-10V only)	**PRSQ4**=Plaster Lathing Ring for use with Rimless Flange **LGSKTSQ4IP66**=IP66 Gasket Kit

Notes:

1. Nominal Lumens will vary depending on selected color, driver and reflector finish.
2. UL/US approved only.
3. Available on anodized aluminum
4. Available on cast aluminum only
5. Matte white finish only
6. Not available with Chicago Plenum.

ENERGY

ENERGY DATA
Sound Rating: Class A standards
(Values at non-dimming line voltage)
Minimum Starting Temperature: -30°C (-22°F)
EMI/RFI: FCC Title 47 CFR, Part 15, Class B (Consumer)
Input Voltage: UNV (120V - 277V)
Power Factor: >0.90 (at nominal input 120-277 VAC & 100% of Rated Output Power)
Input Frequency: 50/60Hz

1000 Lumen D010		1500 Lumen D010	
Input Power: 11W	THD: <14%	Input Power: 15.5W	THD: <13%
120V Input Current: 0.09A	277V Input Current: 0.04A	120V Input Current: 0.13A	277V Input Current: 0.06A

2000 Lumen D010		3000 Lumen D010	
Input Power: 21.2W	THD: <9%	Input Power: 27.6W	THD: <10%
120V Input Current: 0.18A	277V Input Current: 0.08A	120V Input Current: 0.23A	277V Input Current: 0.10A

4000 Lumen D010	
Input Power: 41.6W	THD: <13%
120V Input Current: 0.35A	277V Input Current: 0.15A

	120V		277V	
Lumens	Inrush (A)	Duration (ms)	Inrush (A)	Duration (ms)
1000 Lumen D010	1.02	0.041	2.18	0.021
1500 Lumen D010	1.02	0.042	2.24	0.064
2000 Lumen D010	1.02	0.077	2.43	0.027
3000 Lumen D010	1.15	0.067	3.26	0.027
4000 Lumen D010	1.2	0.088	3.9	0.03

Powering Business Worldwide

Eaton
1121 Highway 74 South
Peachtree City, GA 30269
P: 770-486-4800
www.eaton.com/lighting

Specifications and dimensions subject to change without notice.

PHOTOMETRY

Test Number	P35089
Housing	LDSQ4B15D010
Module	EU4B10208035
Trim	4LBCSSQ1MMS
Lumens	1504
Efficacy	107.4 Lm/W
SC	1.19

CANDLEPOWER DISTRIBUTION

Downlight

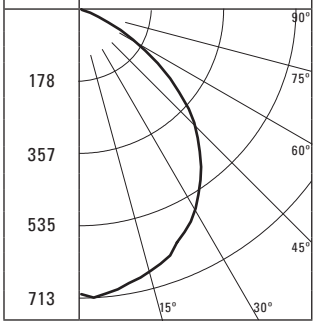

CONE OF LIGHT

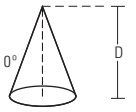

D	FC	L	W
5.5'	24	6.4	6.4
7'	15	8.2	8.2
8'	11	9.4	9.4
9'	9	10.6	10.6
10'	7	11.8	11.8
12'	5	14.2	14.2

CANDELA TABLE

Degrees Vertical	Candela
0	704
5	690
15	663
25	605
35	515
45	401
55	232
65	76
75	2
85	0
90	0

ZONAL LUMEN SUMMARY

Zone	Lumens	% Fixture
0-30	534	35.5
0-40	857	57
0-60	1395	92.7
0-90	1504	100
90-180	0	0
0-180	1504	100

LUMINANCE

Average Candela Degrees	Average 0° Luminance
45	43408
55	30960
65	13765
75	591
85	0

Test Number	P35088
Housing	LDSQ4B15D010
Module	EU4B10208035
Trim	4LBSQ1LI
Lumens	1453
Efficacy	103.8 Lm/W
SC	0.91

CANDLEPOWER DISTRIBUTION

Downlight

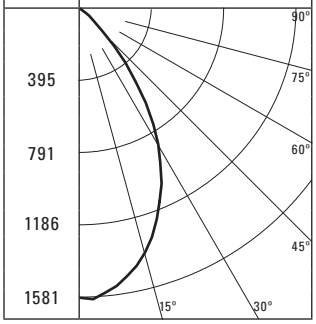

CONE OF LIGHT

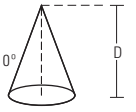

D	FC	L	W
5.5'	52	4.8	4.8
7'	32	6.2	6.2
8'	25	7.2	7.2
9'	20	8	8
10'	16	9	9
12'	11	10.8	10.8

CANDELA TABLE

Degrees Vertical	Candela
0	1574
5	1550
15	1364
25	1017
35	440
45	97
55	14
65	4
75	1
85	0
90	0

ZONAL LUMEN SUMMARY

Zone	Lumens	% Fixture
0-30	996	68.5
0-40	1322	91
0-60	1447	99.5
0-90	1453	100
90-180	0	0
0-180	1453	100

LUMINANCE

Average Candela Degrees	Average 0° Luminance
45	10500
55	1868
65	724
75	296
85	0

Test Number	P202481
Housing	LDSQ4B40D010
Module	EU4B30508035
Trim	4LBCSSQ1MMS
Lumens	4110
Efficacy	95.5 Lm/W
SC	1.19

CANDLEPOWER DISTRIBUTION

Downlight

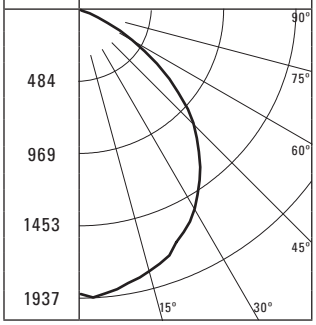

CONE OF LIGHT

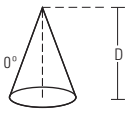

D	FC	L	W
5.5'	64	6.4	6.4
7'	40	8.2	8.2
8'	30	9.4	9.4
9'	24	10.6	10.6
10'	19	11.8	11.8
12'	14	14.2	14.2

CANDELA TABLE

Degrees Vertical	Candela
0	1924
5	1886
15	1812
25	1653
35	1408
45	1096
55	634
65	208
75	6
85	0
90	0

ZONAL LUMEN SUMMARY

Zone	Lumens	% Fixture
0-30	1458	35.5
0-40	2342	57
0-60	3812	92.7
0-90	4110	100
90-180	0	0
0-180	4110	100

LUMINANCE

Average Candela Degrees	Average 0° Luminance
45	18216
55	15774
65	10088
75	2368
85	0

Test Number	P202480
Housing	LDSQ4B40D010
Module	EU4B30508035
Trim	4LBSQ1LI
Lumens	3970
Efficacy	92.3 Lm/W
SC	0.91

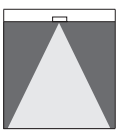

CANDLEPOWER DISTRIBUTION

Downlight

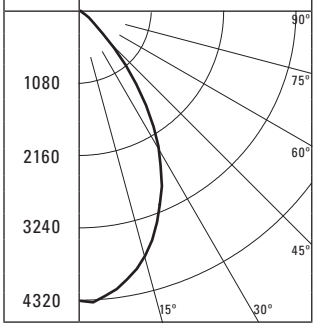

CONE OF LIGHT

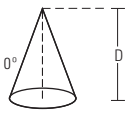

D	FC	L	W
5.5'	142	4.8	4.8
7'	88	6.2	6.2
8'	67	7.2	7.2
9'	53	8	8
10'	43	9	9
12'	30	10.8	10.8

CANDELA TABLE

Degrees Vertical	Candela
0	4301
5	4235
15	3727
25	2779
35	1202
45	265
55	38
65	11
75	3
85	0
90	0

ZONAL LUMEN SUMMARY

Zone	Lumens	% Fixture
0-30	2720	68.5
0-40	3613	91
0-60	3952	99.5
0-90	3970	100
90-180	0	0
0-180	3970	100

LUMINANCE

Average Candela Degrees	Average 0° Luminance
45	4058
55	723
65	279
75	113
85	0

Powering Business Worldwide

Eaton
1121 Highway 74 South
Peachtree City, GA 30269
P: 770-486-4800
www.eaton.com/lighting

Specifications and dimensions subject to change without notice.

Fail-Safe

DESCRIPTION

6 inch LED recessed sealed downlight specially designed for LED technology. Two-stage reflector system produces smooth distribution with excellent light control and low aperture brightness. Lumen packages include 1000, 1500, 2000 and 3000 delivered lumens with color temperatures of 2700K, 3000K, 3500K and 4000K. Bottom trim ring accepts smooth or prismatic acrylic or glass, and fastens to the housing using (4) flush, countersunk stainless-steel screws. IP66 standard. NSF rated.

Catalog #		Type
Project		
Comments		Date
Prepared by		

SPECIFICATION FEATURES

Lower Shielding Reflector
0.050" thick aluminum lower reflector in combination with a lensed upper optical chamber.

Bottom Trim Ring
Steel trim ring, powder coat painted anti-microbial white, retained with (4) flush countersunk, stainless-steel screws. Gasketing seals lens to trim ring, trim ring to ceiling. Stainless steel ring available.

Plaster Frame Collar
Die-cast aluminum 1-1/2" deep collar accommodates ceiling materials up to 2".

Universal Mounting Bracket
Accepts 1/2" EMT, C channel and bar hangers and adjusts 5" vertically from above and below the ceiling.

Thermal
Extruded aluminum heat sink conducts heat away from the LED module.

LED (Light-Emitting Diode)
LED system contains high brightness white LEDs combined with a high reflectance upper reflector and convex transitional lens producing even distribution with no pixilation. Rated for 50,000 hours at 70% lumen maintenance. Auto resetting, thermally protected, LEDs are turned off when safe operating temperatures are exceeded. Flexible disconnect allows for tool-less replacement of LED engine from below ceiling.

Junction Box
(4) 1/2" and (2) 3/4" trade size pry-outs positioned to allow straight conduit runs. Listed for (8) #12 AWG (four in, four out) 90°C conductors and feed thru branch wiring.

Driver
Driver can be serviced from above or through the aperture.

Environmental
Fixture not to be operated in ambient temperatures above 40° C.

Code Compliance
Thermally protected and CSA listed for protected wet locations. IP66 standard from below the ceiling. Optional City of Chicago environmental air (CCEA) marking for plenum applications. EMI/RFI emissions per FCC 47CFR Part 18 Class B consumer limits. Non-IC rated - Insulation must be kept 3" from top and sides of housing. RoHS Compliant. Title 24 2008 Compliant with designated trims. Photometric testing completed in accordance with IES LM 79 standards. LED life testing completed in accordance with LM 80 standards. NSF rated. IP66 rated.

Warranty
5-year warranty.

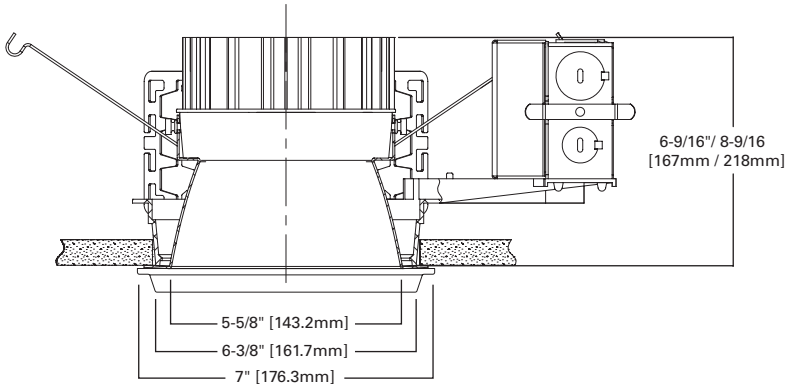

LUMENS	HEIGHT
1000	6-9/16"
1500	6-9/16"
2000	8-9/16"
3000	8-9/16"

TOP VIEW

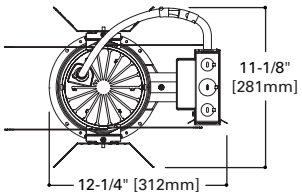

TOP VIEW WITH BATTERY

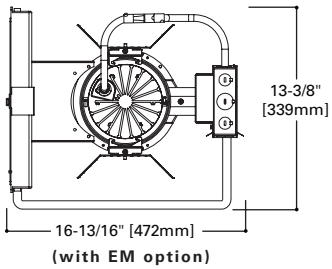

(with EM option)

FFLD6A
FV/S6LM0
FSBT6

6" Sealed/Medical LED Downlight Flush Lens

1,000, 1,500, 2,000 or 3,000 Lumens

ENERGY DATA

Delivered Lumens	Input Watts
1000	14.7
1500	22.6
2000	33.6
3000	46

ORDERING INFORMATION

Example:
Line Item #1: Housing: **FFLD6A15D010TE** = 6" LED Plaster Frame, 1500 Lumen, 0-10V Dimming
Line Item #2: Power Module: **FERM6A10835** = 6" Power Module, 85 CRI, 3500K Color Temperature
Line Item #3: Reflector: **FV/S6LM0LI** = 6" Sealed Reflector, Specular Clear
Line Item #4: Bottom Trim: **FSBT694** = 6" Sealed Bottom Trim, 0.187" Smooth, Clear Tempered Glass

Housing	Delivered Lumens [1]	Driver	Options	**Power Module**	Lumens	CRI	Color Temp	**Reflector**	Finish	**Bottom Trim**	Lens	Accessories
				FERM6A					LI	FSBT6		

FFLD6A= 6" aperture
FFLD6ACP= 6" aperture, Chicago plenum [4]

10= 1000 lumens
15= 1500 lumens
20= 2000 lumens
30= 3000 lumens

D010TE= 120-277V, 0-10V 10% dimming or trailing edge 120V dimming
D5LT= Fifth Light DALI dimming
DL3= 1% - 100% dimming, 120-277V Lutron Hi-lume Ecosystem or 3-wire
DLT= 1% - 100% dimming, 120V Lutron Hi-lume forward phase dimming
DMX= DMX dimming
DE010= 1 to 100% Dimming 120-277V, 50/60Hz 0-10V

IEMBOD= Emergency module, internal [2, 3]

FERM6A= 6" module

10= 1000
15= 1500
20= 2000
30= 3000

8= 80
9= 90

27= 2700K
30= 3000K
35= 3500K
40= 4000K
27CP= 2700K, Chicago Plenum
30CP= 3000K, Chicago Plenum
35CP= 3500K, Chicago Plenum
40CP= 4000K, Chicago Plenum

FV/S6LM0= 6" Reflector
FV/S6LM0E= 6" Reflector for use with IEM Integral Emergency Option

LI= Specular Clear
W= Gloss White

FSBT6= Sealed Bottom Trim, Powder Coat Painted Matte White, Anti-microbial
FSBT6SS= Sealed Bottom Trim, Stainless Steel, Powder Coat Painted Matte White
FSBT6NAT= Sealed Bottom Trim, Aluminum, Matte White Natatorium Finish, Stainless Steel Hardware

94= 0.187" Smooth Clear Tempered Glass
89BV= 0.125" Smooth Clear Acrylic
89BI= 0.125" Clear Acrylic with RFI Grid

HB26= C Channel Bar Hanger, 26" Long, Pair
HB50= C Channel Bar Hanger, 50" Long, Pair
RMB= Wood Joist Bar Hanger, 22" Long, Pair

Notes:

[1] Nominal delivered Lumens will vary depending on selected CCT, driver and reflector finish.

[2] Not available in Chicago Plenum.

[3] Not CSA approved.

[4] Not available with emergency battery pack.

PHOTOMETRICS

See website for photometrics / IES file.

FEELUX®

FLX Stix NDPro

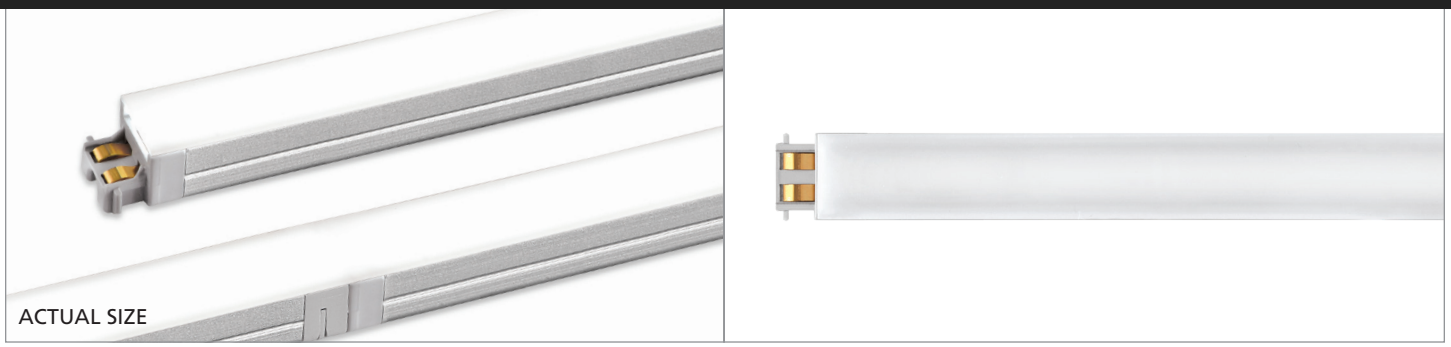

PRODUCT FEATURES

- Seamless Spot Free Illumination
- Ultra Slim Profile
- Close Pitch LEDs
- Perfected Color Consistency
- Even Surface Illumination
- Multiple Lengths for Easy Configuration
- End to End Snap-In Connection
- Dimmable with 0-10V, Forward/Reverse Phase Other Options Available
- Side-Feed Units for Long Continuous Runs
- Title 24 Compliant
- Quick Ship Available*

PRODUCT SPECIFICATIONS

- 24VDC Constant Voltage Feelux or Approved Class 2 Drivers
- Operating Temperature: 32-113°F (0-45°C)
- Lamp Life: 50,000 hrs L70
- Available Color: 2700K, 3000K, 3500K, 4000K, 6000K*
- CRI/Ra > 90
- 90 lm/W - 3.5W/ft - 315 lm/ft
- IP20 – Damp Location/Closet Approved
- Beam Angle: 120°
- Finish: Aluminum
- 5 year Warranty
- Product is approved for Closet/Storage space installation per NEC410.16 (A) (3) and NEC410.16 (C)(5) per NRTL certification

* Pending factory availability

DIMENSIONS

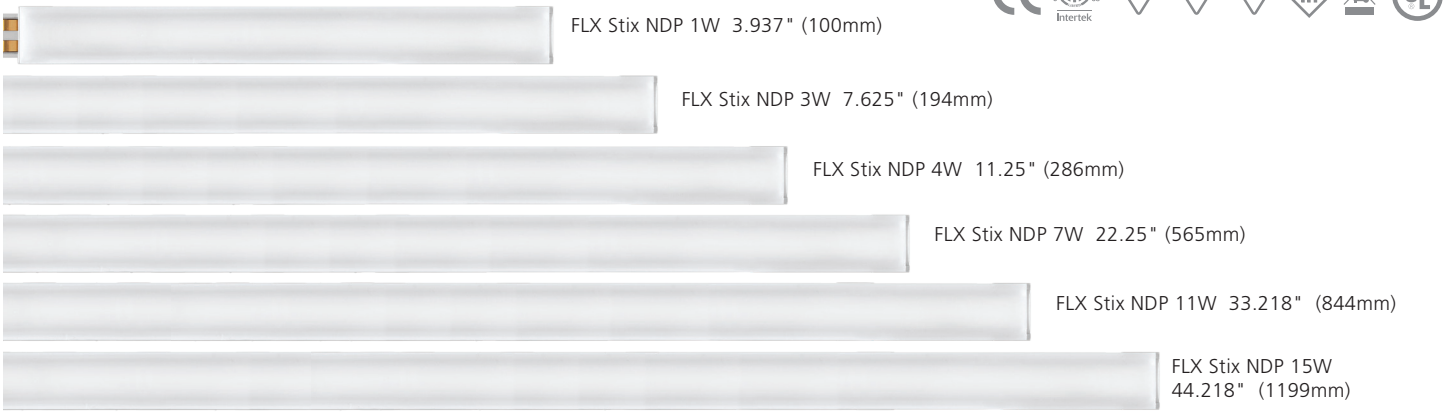

Model Number	Voltage Input (V)	Power Input (W)	A inches (mm)	B inches (mm)	C inches (mm)	D inches (mm)	E inches (mm)	F inches (mm)	G inches (mm)
NDP1-(Color)K-24V	DC 24	1	3.75" (95.25)	3.937" (100)	4.812 (122)	.46875 (11.9)	.4375 (11)	.40625 (10.3)	.375 (9.5)
NDP3-(Color)K-24V	DC 24	3	7.406" (188)	7.625" (194)	8.5 (216)	.46875 (11.9)	.4375 (11)	.40625 (10.3)	.375 (9.5)
NDP4-(Color)K-24V	DC 24	4	11.0312" (280)	11.25" (286)	12.125 (308)	.46875 (11.9)	.4375 (11)	.40625 (10.3)	.375 (9.5)
NDP7-(Color)K-24V	DC 24	7	22.0312" (560)	22.25" (565)	23.125 (587)	.46875 (11.9)	.4375 (11)	.40625 (10.3)	.375 (9.5)
NDP11-(Color)K-24V	DC 24	11	33.0312" (839)	33.218" (844)	34.093 (866)	.46875 (11.9)	.4375 (11)	.40625 (10.3)	.375 (9.5)
NDP15-(Color)K-24V	DC 24	15	44.0312" (1118.4)	47.218" (1199)	45.093 (1145)	.46875 (11.9)	.4375 (11)	.40625 (10.3)	.375 (9.5)

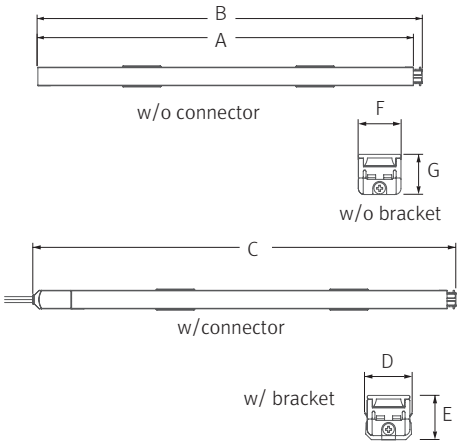

If you have any questions, please contact your local Feelux Representative. Specifications subject to change without notice. All Rights Reserved. © 2016 Feelux Lighting, Inc.

EASY CONNECTION

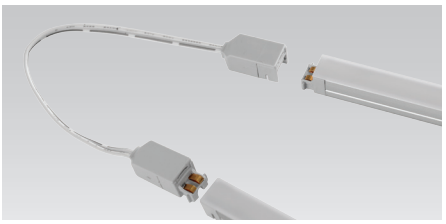

OPTIONS

INSTALLATION

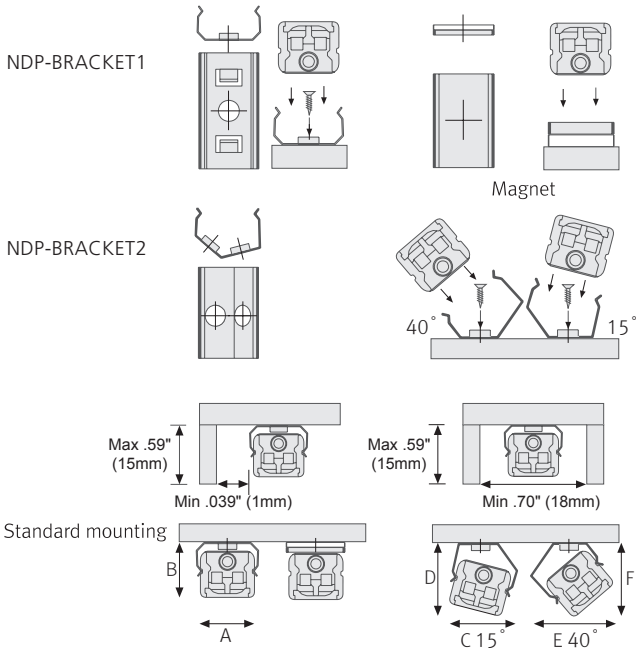

CAN POWER UP TO 55 WATT MAX FIXTURE LOAD. CONNECTED LINE OF LIGHT REQUIRES SIDE FEED EVERY 15FT(55WATT). TOTAL CONNECTED LOAD SHOULD NOT EXCEED 90% OF DRIVER WATTS

MAGNET

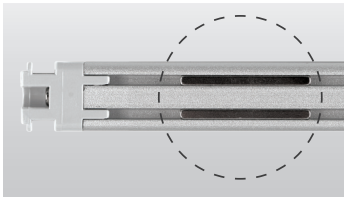

INLINE DIMMER

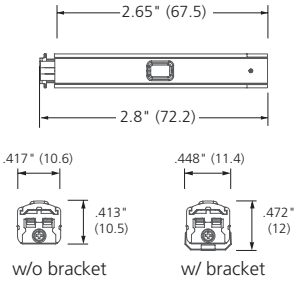

LED DRIVER OPTIONS

Other approved drivers include Justin, eldoLED, and Lutron. Consult factory for additional options.

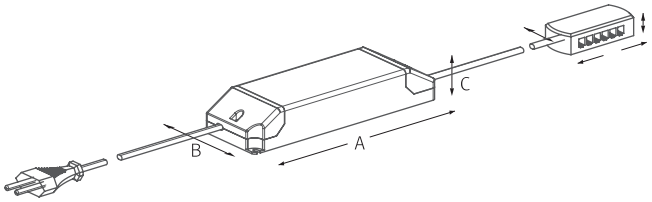

Model Number	A inches (mm)	B inches (mm)	C inches (mm)
FLC30-24V/XL	5.9" (150)	1.6" (41)	1.22" (31)
FLC75-24V/XL	7.08" (180)	2.36" (60)	1.25" (32)
XLD75-124V-FC	11.22" (285)	2.94" (74.7)	1.63" (41.5)
XLD200-224V-FCL-DIM	12.28" (312)	4.46" (113.5)	2.28" (60.5)
XLAV80(L)-124V-SSB	14.4" (366)	4.48" (124)	1.7" (43)

If you have any questions, please contact your local Feelux Representative. Specifications subject to change without notice. All Rights Reserved. © 2016 Feelux Lighting, Inc.

CONNECTION

NO RUN TO EXCEED 55W

IF LONGER RUNS ARE REQUIRED USE SIDE FEED UNIT NDV3-(COLOR)K-24V-S TO CONTINUE SEAMLESS LIGHTING. NOT TO EXCEED 90% OF DRIVER RATED WATTAGE.

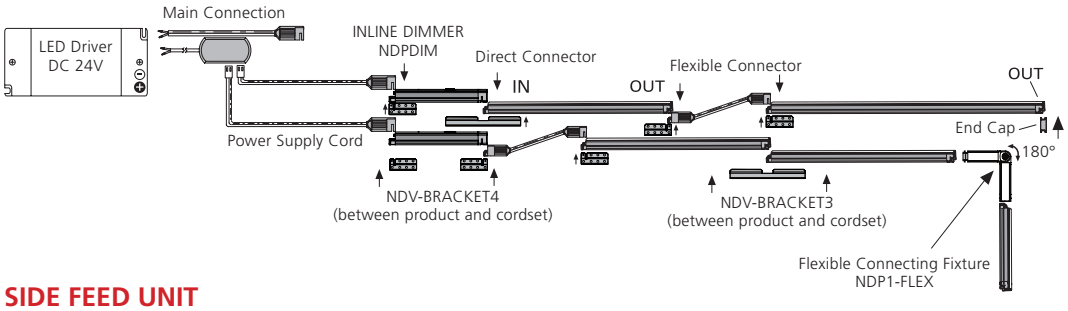

SIDE FEED UNIT

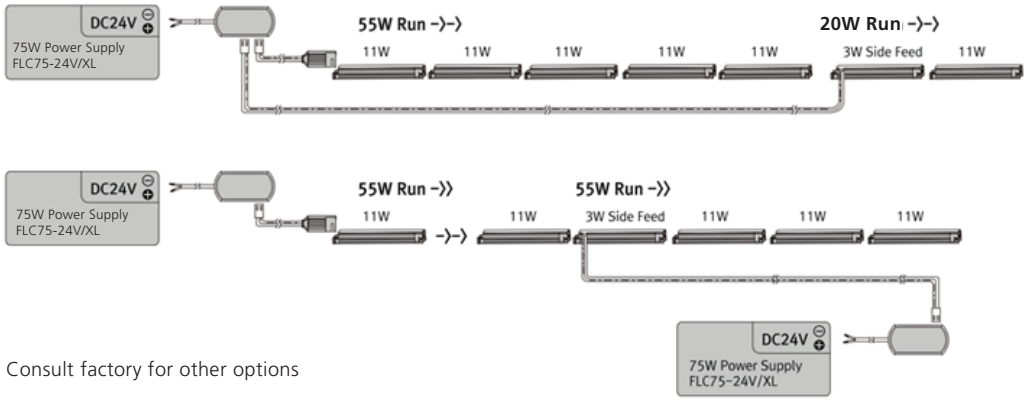

Consult factory for other options

BEAM SPREADS

FLX Stix NDP 1W
(More information to come.
Please consult factory)

FLX Stix NDP 3W
(More information to come.
Please consult factory)

FLX Stix NDP 4W (319.9lm (Lamp), 105.3cd (Max intensity), 4W (Power))

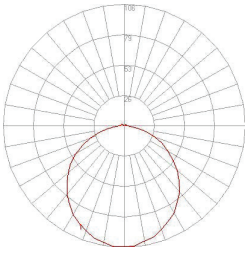

FLX Stix NDP 7W (632.3lm (Lamp), 205.7cd (Max intensity), 7W (Power))

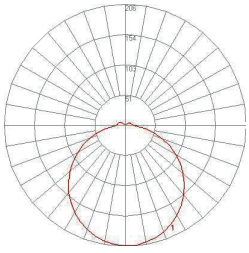

FLX Stix NDP 11W (957.5lm (Lamp), 315.1cd (Max intensity), 11W (Power))

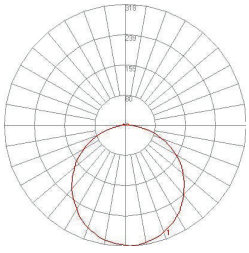

NDV 15W 4000K (1,043.9lm (Lamp), 422.9cd (Max intensity), 15W (Power))

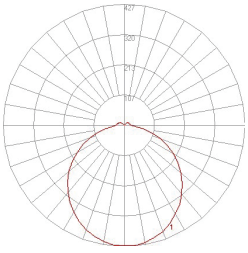

If you have any questions, please contact your local Feelux Representative. Specifications subject to change without notice. All Rights Reserved. © 2016 Feelux Lighting, Inc.

COMPONENTS

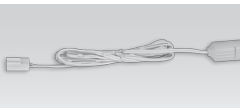

Power Cable

____ NDPPC (8')

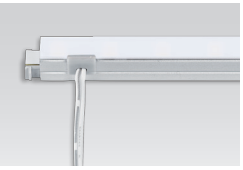

Sidefeed for Seamless Extension (3W)

__ NDP3-(color)K-24V-S

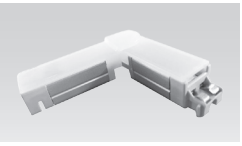

Flexible Connecting Fixture (1W)

__ NDP1-(color)K-24V-Flex

Available 4Q16

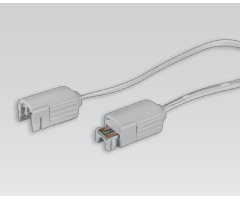

Flexible Connecting Cable

____ NDPPTC (6")
____ NDPPTC1 (1')
____ NDPPTC2 (2')
____ NDPPTC4 (4')
____ NDPPTC6 (6')

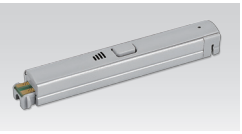

In-Line Dimmer

____ NDPDIM

(Max 55W in a row)

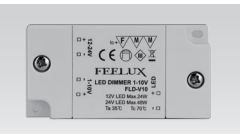

Dimming Interface

Max. 100W (100W/CH, 1CH)
0 -10V Signal

____ FDC-L10

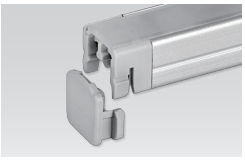

End Cap

____ NDP-CAP

Included with fixture

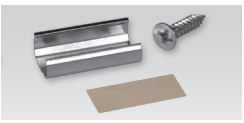

Metal Mounting Brackets

____ NDV-BRACKET1

Included with fixture

Angled Brackets

Angled 15°/40° (BK2)

____ NDV-BRACKET2

Optional

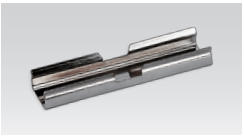

Connecting Brackets

Fixture to Fixture

____ NDV-BRACKET3

Included with fixture

Power Brackets

Power Feed to Fixture

____ NDV-BRACKET4

Included with NDPPC and NDPPTC

A larger selection of drivers are available including remote and hard wire drivers. Please consult factory.

LED Drivers

with distributor and power cord (1800mm)

____ FLC30-24V/XL
____ FLC75-24V/XL

Hard Wire Driver

(90V to 300V)

____ XLAV80(L)-124V-SSB
____ XLD200-224V-FCL-DIM
____ XLD75-124V-FC

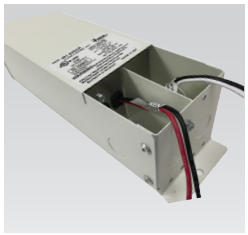

Justin Drivers

____ 481-24DCR
____ 483-24DCR-277
____ 961-24DCR
____ 963-24DCR-277
____ C2240-24DCR
____ C2240-24DCR-277

12 Port Hub

____ D12P-HUB

Included with Cord and Plug drivers. Order separately for Hard Wire or 3rd Party Drivers

SPECIFICATION GUIDE: NOT TO BE USED FOR ORDERING. The Specification Guide is intended solely to ensure that all options are considered.

MODEL	COLOR	MOUNTING	CONFIGURATION	RUN LENGTH	DRIVER	CONTROLS	VOLTAGE
NDP				ft.			
NDP	**27K** -2700K **30K** -3000K **35K** -3500K **40K** -4000K **60K** -6000K	**STD** - Flat Brackets Magnets Included **BK2** -15°/40° Brackets	**S** -Straight **V** -Varies*	**RUN LENGTH IN FEET** Fill out for every run section ***DRAWINGS AND RUN LENGTH REQUIRED**	**CP** - Cable/Plug **HW** - Hard Wire **TD** - 3rd Party Drivers Consult Factory	**NDM** Non-Dim **IDM** Inline Dim **FDC** 0-10V Interface **FPH** Forward Phase **RPH** Reverse Phase	**100V** **120V** **230V** **277V**

NOTE: No Run to Exceed 55W without use of Side Feed Unit

If you have any questions, please contact your local Feelux Representative. Specifications subject to change without notice. All Rights Reserved. © 2016 Feelux Lighting, Inc.

Crystal Swing Face With Hang- Straight Hinge

Edge- Lit LED Exit Signs Series CRSW

CRSW.04.15.08

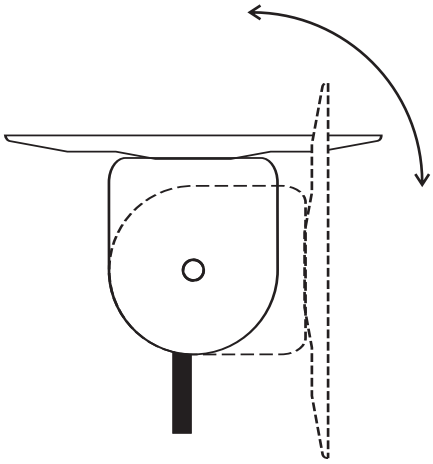

CONSTRUCTION

- Extruded aluminum LED lamp housing mounts to a form- fitting canopy in solid aluminum, which is field- adjustable for wall or ceiling mount.
- Standard finishes: satin white and brushed aluminum.
- Optional finishes: Painted colors in any custom shade, or anodized finishes in satin bronze, polished gold, mirror silver & many others.
- Diamond polished acrylic lenses for optimum light transmission, exterior quality and high brightness.
- Ultra high output LEDs produce brilliant graphic illumination well above code minimums

ELECTRONICS

- Isolated, all solid state power supply with 2- wire universal input from 120 VAC to 277 VAC with precise current and voltage regulation.
- Remotes may be connected to one of the following:
  - Series CBS UNIVERSAL CENTRAL BATTERY SYSTEM
  - Series MTL MASTER-REMOTE SYSTEM
- Power supply is surge and spike protected, with a low voltage disconnect.
- The complete power supply module with optional NICAD battery pack is sealed within a phenolic plastic enclosure, which fits inside a standard 4" square deep J- box.. AC and DC wiring is quickly attached with plug connectors.

DIAGNOSTICS OPTION

- An advanced microprocessor monitors all charger functions and battery condition continuously and automatically performs all tests and visual indications required by UL Standard 924.

MOUNTING

- Field selectable wall or ceiling mount. No exposed hardware.

REMOTE MODELS

- All versions of this product are available as a Remote, configured to operate from one of three central battery systems. For full details, refer to Series CRSRE specification sheet, and the following specifications for central battery systems:

- Series CBS UNIVERSAL CENTRAL BATTERY SYSTEM
- Series MCS MULTILITE CENTRAL SYSTEM
- Series MTL MASTER-REMOTE SYSTEM

CODES

- Manufactured and tested to UL Standard 924. Conforms to NFPA Life Safety Code 101, UBC and NEC.

WARRANTY

- 5 year total customer satisfaction warranty. For details see product catalog technical data section.

U.S. Patent 5, 276, 591

DESIGNED & MANUFACTURED IN THE USA

C ETL US LISTED Intertek
CONFORMS TO UL 924/ CSA 22.2 #141

FIXTURE SCHEDULE

MODEL	CATALOG NO
APPROVAL	JOB INFORMATION

Signtex Inc
LIGHTING
SPECIFIED EMERGENCY LIGHTING

Crystal Swing Face With Hang- Straight Hinge

Edge- Lit LED Exit Signs Series CRSW

CRSW.04.15.08

Supply and install Signtex CRYSTAL Series CRS surface mount LED exit signs. The lamp housing and canopy shall be of extruded aluminum. Faceplate shall be optical grade acrylic with diamond polished edges and allows swing rotation up to 180° when required.. Lighting uniformity shall be better than 4:1 when measured over any illuminated area and average brightness will exceed 6 ft Lambert (21 Cd/m2). Life expectancy of the LEDs shall be in excess of 20 years. The power supply and charger shall be an isolated digital type with regulated current and voltage output to the lamp load and batteries (emergency models). AC supply shall be universal 120/277 VAC input via two- wire feed. One standard power supply shall be capable of driving up to 5 single face remote signs in addition to the master, with emergency operation at least 90 minutes for each sign. Battery charge time to restore full capacity after discharge shall be less than 24 hours.

OPTIONS:	CODE:
Damp Location	DP
Battery Diagnostics	DG
Mirror Lens (SF)	M
White Lens (SF & DF)	W
For other Custom Colors: Call Factory	

NOTE: PRE- INSTALL 4" X 4" X 2 1/8" DEEP J- BOX WITH 1 1/2" EXTENSION RING

MOUNTING DATA & DIMENSIONS:

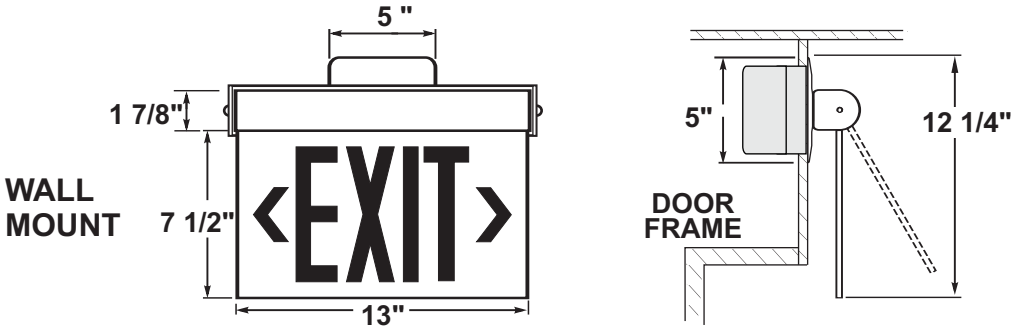

BATTERY DIAGNOSTIC FUNCTIONS:

Microprocessor programmed to perform tests as follows:

Continuous Monitoring w/ 1 Second Sampling	Every 28 Days	Every 12 Months
Lamp Connections	Transfer switch function	Full 90 minute emergency operation test with test/ fail and manual report signal
Battery Connections	Battery discharge rate under full load	

SELF- TEST DIAGNOSTIC FUNCTIONS

STATUS	LED DISPLAY
NORMAL FULL CHARGE	GREEN ON
NORMAL FAST CHARGE	ORANGE ON
FAILED BATTERY	RED FLASH FAST
FAILED LAMP	GREEN FLASH
FAILED TRANSFER	ORANGE FLASH
FAILED CHARGER	RED FLASH SLOW

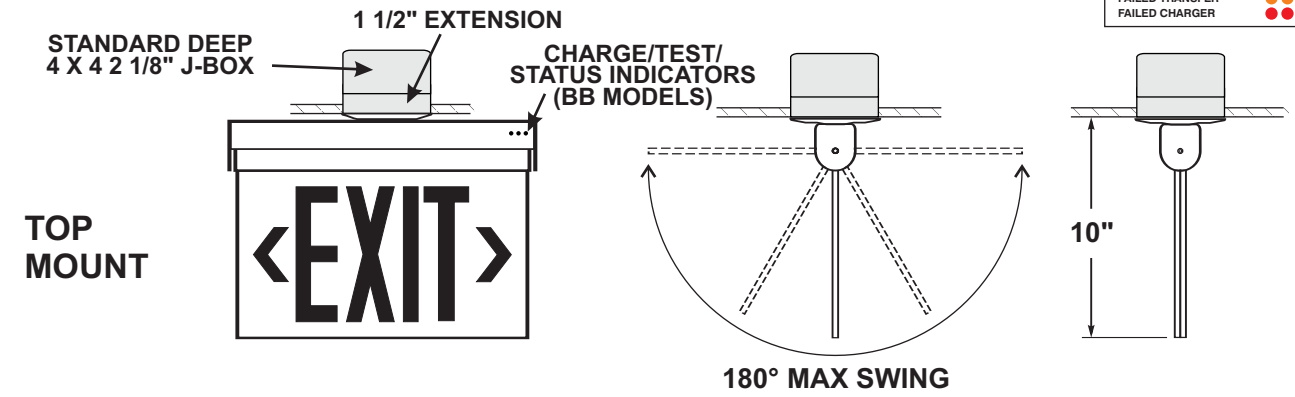

ORDERING INFORMATION:

EXAMPLE: **CRSWBB-1RCBA-NA-TW-DG**

SINGLE FACE **DOUBLE FACE**

CRSW BB - 1 R C BA - NA - DG

MODEL SERIES	OPERATION	NO. of FACES	LETTER COLOR	BACKGRD COLOR	STANDARD TRIM FINISH	ARROW DIRECTION	OPTIONS
CRS	BB= Battery Backup NB= No Battery (Ac Only) REC=Remote w/ Central Battery System REM=Remote w/ Master Remote System	1= Single 2= Double	R= Red G= Green	C= Clear (SF) M=Mirror (DF) For Other Options See Above	W= Satin White BA= Brushed Alum X= Custom	NA= No Arrow AR= Arrow Right >
AL= Arrow Left <
AB= Arrow Both < > Double Face Signs: NA= No Arrow LR= Single Arrow Each Side > AB= Double Arrow Each Side < >	See Above

Signtex Inc
LIGHTING
220 VFW Avenue, Grasonville, MD 21638
TEL:(410)827-8300 Fax:(410)827-8866
sales@signtexinc.com www.signtexinc.com

DISTRIBUTOR:

Crystal Swing Face With Hang- Straight Hinge

Edge- Lit LED Exit Signs Series CRSW

CRSW.04.15.08

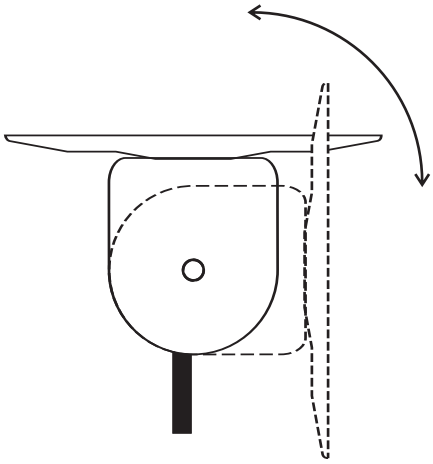

CONSTRUCTION

- Extruded aluminum LED lamp housing mounts to a form- fitting canopy in solid aluminum, which is field- adjustable for wall or ceiling mount.
- Standard finishes: satin white and brushed aluminum.
- Optional finishes: Painted colors in any custom shade, or anodized finishes in satin bronze, polished gold, mirror silver & many others.
- Diamond polished acrylic lenses for optimum light transmission, exterior quality and high brightness.
- Ultra high output LEDs produce brilliant graphic illumination well above code minimums

ELECTRONICS

- Isolated, all solid state power supply with 2- wire universal input from 120 VAC to 277 VAC with precise current and voltage regulation.
- Remotes may be connected to one of the following:
  - Series CBS UNIVERSAL CENTRAL BATTERY SYSTEM
  - Series MTL MASTER-REMOTE SYSTEM
- Power supply is surge and spike protected, with a low voltage disconnect.
- The complete power supply module with optional NICAD battery pack is sealed within a phenolic plastic enclosure, which fits inside a standard 4" square deep J- box.. AC and DC wiring is quickly attached with plug connectors.

DIAGNOSTICS OPTION

- An advanced microprocessor monitors all charger functions and battery condition continuously and automatically performs all tests and visual indications required by UL Standard 924.

MOUNTING

- Field selectable wall or ceiling mount. No exposed hardware.

REMOTE MODELS

- All versions of this product are available as a Remote, configured to operate from one of three central battery systems. For full details, refer to Series CRSRE specification sheet, and the following specifications for central battery systems:

- Series CBS UNIVERSAL CENTRAL BATTERY SYSTEM
- Series MCS MULTILITE CENTRAL SYSTEM
- Series MTL MASTER-REMOTE SYSTEM

CODES

- Manufactured and tested to UL Standard 924. Conforms to NFPA Life Safety Code 101, UBC and NEC.

WARRANTY

- 5 year total customer satisfaction warranty. For details see product catalog technical data section.

U.S. Patent 5, 276, 591

DESIGNED & MANUFACTURED IN THE USA

C ETL US LISTED Intertek
CONFORMS TO UL 924/ CSA 22.2 #141

FIXTURE SCHEDULE

MODEL	CATALOG NO
APPROVAL	JOB INFORMATION

Signtex Inc
LIGHTING
SPECIFIED EMERGENCY LIGHTING

Crystal Swing Face With Hang- Straight Hinge

Edge- Lit LED Exit Signs Series CRSW

CRSW.04.15.08

Supply and install Signtex CRYSTAL Series CRS surface mount LED exit signs. The lamp housing and canopy shall be of extruded aluminum. Faceplate shall be optical grade acrylic with diamond polished edges and allows swing rotation up to 180° when required.. Lighting uniformity shall be better than 4:1 when measured over any illuminated area and average brightness will exceed 6 ft Lambert (21 Cd/m2). Life expectancy of the LEDs shall be in excess of 20 years. The power supply and charger shall be an isolated digital type with regulated current and voltage output to the lamp load and batteries (emergency models). AC supply shall be universal 120/277 VAC input via two- wire feed. One standard power supply shall be capable of driving up to 5 single face remote signs in addition to the master, with emergency operation at least 90 minutes for each sign. Battery charge time to restore full capacity after discharge shall be less than 24 hours.

OPTIONS:	CODE:
Damp Location	DP
Battery Diagnostics	DG
Mirror Lens (SF)	M
White Lens (SF & DF)	W
For other Custom Colors: Call Factory	

NOTE: PRE- INSTALL 4" X 4" X 2 1/8" DEEP J- BOX WITH 1 1/2" EXTENSION RING

MOUNTING DATA & DIMENSIONS:

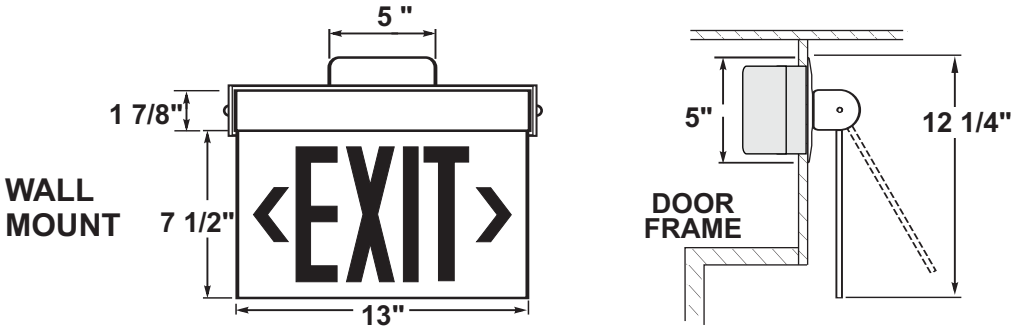

BATTERY DIAGNOSTIC FUNCTIONS:

Microprocessor programmed to perform tests as follows:

Continuous Monitoring w/ 1 Second Sampling	Every 28 Days	Every 12 Months
Lamp Connections	Transfer switch function	Full 90 minute emergency operation test with test/ fail and manual report signal
Battery Connections	Battery discharge rate under full load	

SELF- TEST DIAGNOSTIC FUNCTIONS

STATUS	LED DISPLAY
NORMAL FULL CHARGE	GREEN ON
NORMAL FAST CHARGE	ORANGE ON
FAILED BATTERY	RED FLASH FAST
FAILED LAMP	GREEN FLASH
FAILED TRANSFER	ORANGE FLASH
FAILED CHARGER	RED FLASH SLOW

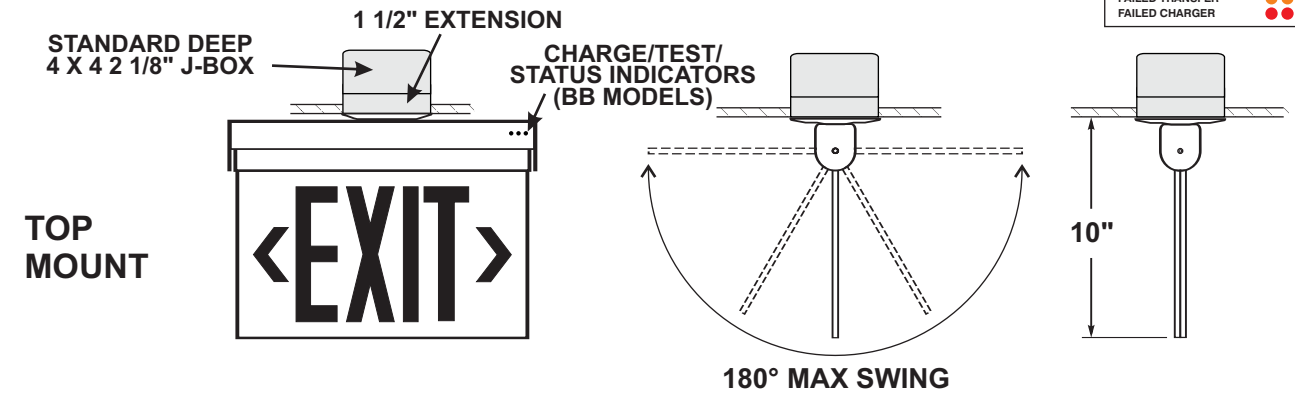

ORDERING INFORMATION:

EXAMPLE: **CRSWBB-1RCBA-NA-TW-DG**

SINGLE FACE **DOUBLE FACE**

CRSW BB - 1 R C BA - NA - DG

MODEL SERIES	OPERATION	NO. of FACES	LETTER COLOR	BACKGRD COLOR	STANDARD TRIM FINISH	ARROW DIRECTION	OPTIONS
CRS	BB= Battery Backup NB= No Battery (Ac Only) REC=Remote w/ Central Battery System REM=Remote w/ Master Remote System	1= Single 2= Double	R= Red G= Green	C= Clear (SF) M=Mirror (DF) For Other Options See Above	W= Satin White BA= Brushed Alum X= Custom	NA= No Arrow AR= Arrow Right >
AL= Arrow Left <
AB= Arrow Both < > Double Face Signs: NA= No Arrow LR= Single Arrow Each Side > AB= Double Arrow Each Side < >	See Above

Signtex Inc
LIGHTING
220 VFW Avenue, Grasonville, MD 21638
TEL:(410)827-8300 Fax:(410)827-8866
sales@signtexinc.com www.signtexinc.com

DISTRIBUTOR:

Rapier Open Face
Die Cast LED System

Custom Graphics
Series RPRO

RPRO.02.12.09

CONSTRUCTION

- Ultra Slim diecast aluminum LED emergency exit lighting system; the wall mount profile is 1/2" above the surface.
- The diecast outer housing contains a closely fitted acrylic lens. An LED array is recessed into the housing. The assembly is extremely rugged and can withstand severe impact and vibration without damage.
- For even further protection, clear polycarbonate security covers are available.

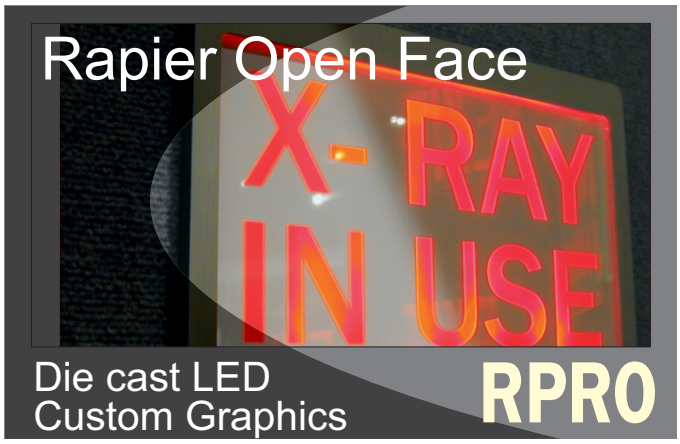

ELECTRONICS

- Universal 120/ 277 VAC input for standard battery or AC unit, or 24 VDC input for remote configuration.
- Remotes may be connected to one of the following:
  - Series CBS UNIVERSAL CENTRAL BATTERY SYSTEM
  - Series MTL MASTER-REMOTE SYSTEM
- Power supply is surge and spike protected, with a low voltage disconnect.
- The complete power supply module with optional NICAD battery pack is sealed within a phenolic plastic enclosure, which fits inside a standard 4" square deep J- box. AC and DC wiring is quickly attached with plug connectors.

DIAGNOSTICS OPTION

- An advanced microprocessor monitors all charger functions and battery condition continuously and automatically performs all tests and visual indications required by UL Standard 924 and NFPA 101.

CODES

- Manufactured and tested to UL Standard 924. Conforms to NFPA Life Safety Code 101, UBC and NEC.

WARRANTY

- 5 year total customer satisfaction warranty. For details see product catalog technical data section.

U.S. Patent 5, 276, 591

DESIGNED & MANUFACTURED IN THE USA

C ETL LISTED US
Intertek
CONFORMS TO
UL 924/ CSA 22.2 #141

FIXTURE SCHEDULE

MODEL	CATALOG NO
APPROVAL	JOB INFORMATION

Signtex Inc
LIGHTING
SPECIFIED EMERGENCY LIGHTING

Rapier Open Face
Die Cast LED System

Custom Graphics
Series RPRO

RPRO.02.12.09

SUGGESTED SPECIFICATIONS:

Supply and install Signtex RAPIER Series RPRO Open Face LED exit signs. The face and housing shall be of diecast aluminum with maximum thickness of 5/8" (single face). Lighting uniformity shall be better than 4:1 when measured over any illuminated area and average brightness will exceed 6 ft Lambert (21 Cd/m2). Life expectancy of the LEDs shall be in excess of 20 years. The power supply and charger shall be an isolated digital type with regulated current and voltage output to the lamp load. AC supply shall be universal 120/277 VAC input via two- wire feed. One standard power supply shall be capable of driving up to 5 single face remote signs in addition to the master.

OPTIONS:	CODE
Damp Location	DP
Pendant MT 12"	PEN
Satin Black	B
Satin Bronze	BZ
Recess Kit	REC
Wire Guard	WG
Dual AC Circuit	DAC
Wide Window Width	WW

For other Custom Colors: Call Factory

NOTE: PRE- INSTALL 4" X 4" X 2 1/8" DEEP J- BOX WITH 1 1/2" EXTENSION RING FOR BB & NB MODELS

MOUNTING DATA & DIMENSIONS:

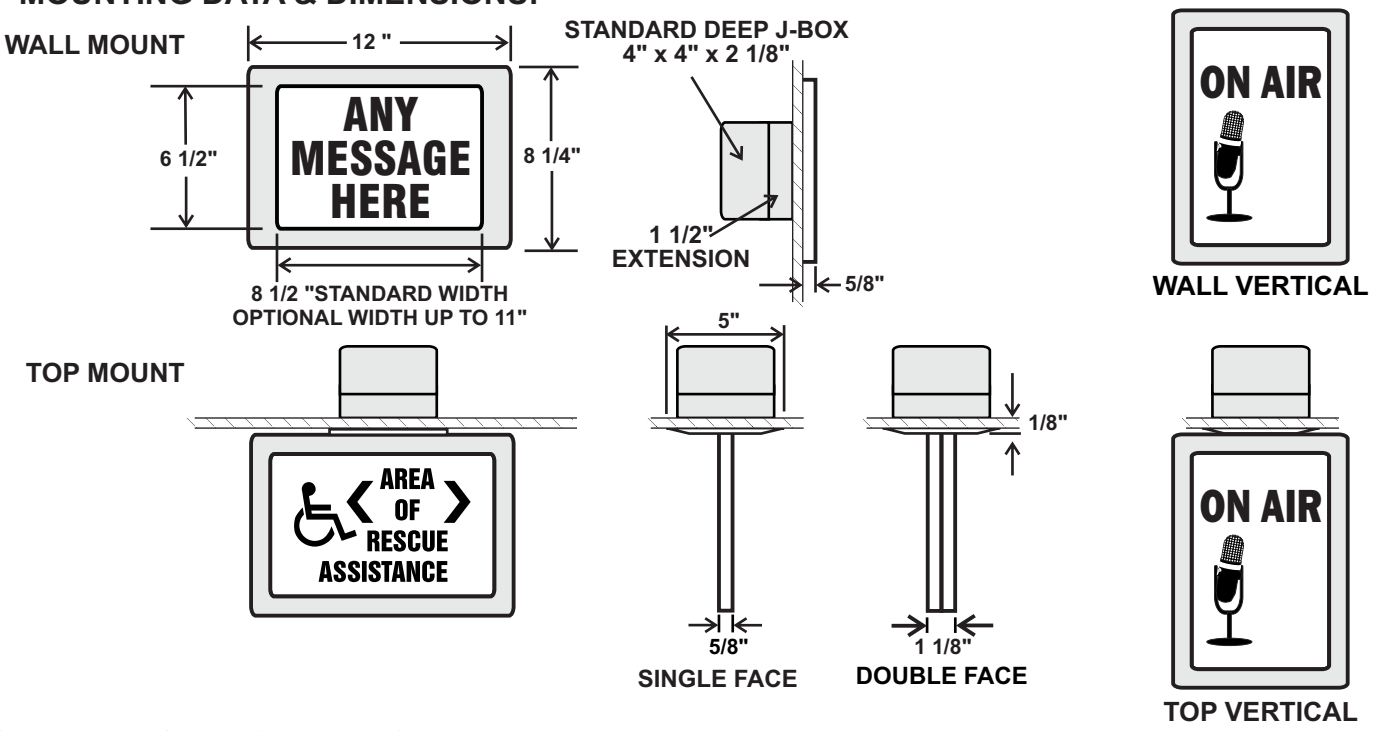

ORDERING INFORMATION: ***EXAMPLE:*** RPRO NB 1 R W W-TW-'X-RAY IN USE

RPRO NB 1 G B BA -TW -DG -"X-RAY IN USE"

MODEL SERIES	OPERATION	NO. of FACES	GRAPHICS COLOR	BACKGROUND COLOR	STANDARD TRIM FINISH	MOUNT	OPTIONS	GRAPHIC
RPRO= OPEN FACE	BB= Battery Backup NB= No Battery (Ac Only) REC=Remote w/ Central Battery System REM=Remote w/ Master Remote System	1= Single 2= Double	R=Red G=Green	W=White B= Black FOR CUSTOM COLORS CONTACT FACTORY	W=White BA=Brushed Aluminum FOR CUSTOM COLORS CONTACT FACTORY	LE=Left End RE=Right End TW=Universal Top or Wall TV=Top Vertical WV=Wall Vertical	See List Above	"GRAPHIC"

Signtex Inc
LIGHTING
220 VFW Avenue, Grasonville, MD 21638
TEL:(410)827-8300 Fax:(410)827-8866
sales@signtexinc.com www.signtexinc.com

DISTRIBUTOR:

Rapier

Die Cast LED Exit
Series RPR

RPR.10.15.16

CONSTRUCTION

- Ultra Slim diecast aluminum LED emergency exit lighting system; the wall mount profile is 1/2" above the surface.

- The diecast outer housing contains a closely fitted acrylic lens. An LED array is recessed into the housing. The assembly is extremely rugged and can withstand severe impact and vibration without damage.

- For even further protection, clear polycarbonate security covers are available.

ELECTRONICS

- Universal 120/ 277 VAC input for standard battery or AC unit, or 24 VDC input for remote configuration.

- Remotes may be connected to one of the following:

  - Series CBS UNIVERSAL CENTRAL BATTERY SYSTEM

  - Series MTL MASTER-REMOTE SYSTEM

- Power supply is surge and spike protected, with a low voltage disconnect.

- The complete power supply module with optional NICAD battery pack is sealed within a phenolic plastic enclosure, which fits inside a standard 4" square deep J- box. AC and DC wiring is quickly attached with plug connectors.

DIAGNOSTICS OPTION

- An advanced microprocessor monitors all charger functions and battery condition continuously and automatically performs all tests and visual indications required by UL Standard 924 and NFPA 101.

CODES

- Manufactured and tested to UL Standard 924. Conforms to NFPA Life Safety Code 101, UBC and NEC.

WARRANTY

- 5 year total customer satisfaction warranty. For details see product catalog technical data section.

U.S. Patent 5, 276, 591

DESIGNED & MANUFACTURED IN THE USA

C ETL US LISTED
Intertek
CONFORMS TO
UL 924/ CSA 22.2 #141

FIXTURE SCHEDULE

MODEL	CATALOG NO
APPROVAL	JOB INFORMATION

Signtex Inc
LIGHTING
SPECIFIED EMERGENCY LIGHTING

Rapier

Die Cast LED Exit
Series RPR

RPR.10.15.16

SUGGESTED SPECIFICATIONS:

Supply and install Signtex RAPIER Series LED exit signs, available as unit equipment or as a remote device connected to a central battery power source. The face and housing shall be of diecast aluminum with maximum thickness of 5/8" (single face). Lighting uniformity shall be better than 4:1 when measured over any illuminated area and average brightness will exceed 6 ft Lambert (21 Cd/m2). Life expectancy of the LEDs shall be in excess of 20 years. The power supply and charger shall be an isolated digital type with regulated current and voltage output to the lamp load and batteries (emergency models). AC supply shall be universal 120/277 VAC input via two- wire feed. One standard power supply shall be capable of driving up to 5 single face remote signs in addition to the master, with emergency operation at least 90 minutes for each sign. Battery charge time to restore full capacity after discharge shall be less than 24 hours.

OPTIONS: CODE

Damp Location	DP
Battery Diagnostics	DG
Dual AC Input (120 VAC)	DAC
End Mount (Left/ Right)	LE/ RE
Polycarbonate Security Cover	PSR*
Polycarbonate Face	
Single Face	PF1*
Double Face	PF2*
Wire Guard	WG
Pendant MT 12"	PEN
Thin Double Face	TDF
Recessed Mount	REC
Satin Black	B
Satin Bronze	BZ

*See data sheet Series PSR

For other Custom Colors Contact Factory

NOTE: PRE- INSTALL 4" X 4" X 2 1/8" DEEP J- BOX WITH 1 1/2" EXTENSION RING FOR BB & NB MODELS

MOUNTING DATA & DIMENSIONS:

WALL MOUNT

STANDARD DEEP J- BOX 4" x 4" x 2 1/8"

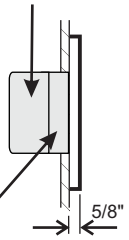

STANDARD 1 1/2" EXTENSION RING

END MOUNT

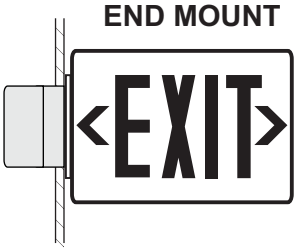

SELF- TEST DIAGNOSTIC FUNCTIONS

STATUS	LED DISPLAY
NORMAL FULL CHARGE	GREEN ON
NORMAL FAST CHARGE	ORANGE ON
FAILED BATTERY	RED FLASH FAST
FAILED LAMP	GREEN FLASH
FAILED TRANSFER	ORANGE FLASH
FAILED CHARGER	RED FLASH SLOW

TOP MOUNT

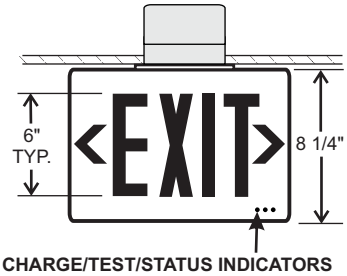

CHARGE/TEST/STATUS INDICATORS

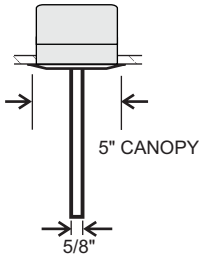

SINGLE FACE

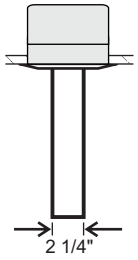

DOUBLE FACE STANDARD MODEL

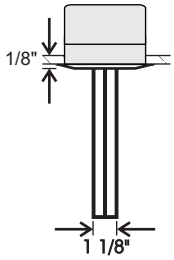

OPTIONAL DOUBLE FACE "THIN" TDF MODEL

PENDANT MOUNT

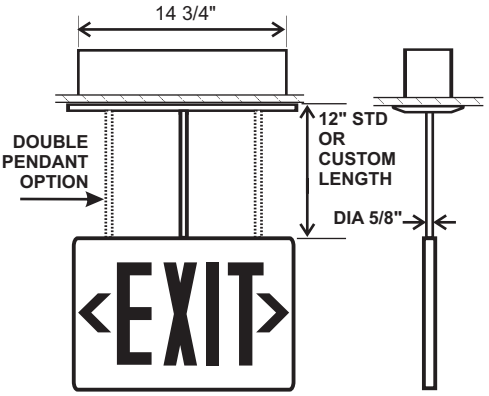

ORDERING INFORMATION: *EXAMPLE:* RPRBB1GW-TW-DG

RPR	NB	1	G	W	-TW	-DG
MODEL SERIES	OPERATION	NO. of FACES	LETTER COLOR	FACE COLOR	MOUNT	OPTIONS
RPR=THIN PROFILE DIECAST	BB= Battery Backup NB= No Battery (Ac Only) REC=Remote w/ Central Battery System REM=Remote w/ Master Remote System	1= SINGLE 2= DOUBLE	R=RED G=GREEN	BA=BRUSHED ALUMINUM W= WHITE FOR CUSTOM COLORS CONTACT FACTORY	TW=UNIVERSAL TOP OR WALL	SEE LIST ABOVE

Emergency Power Rating:
Single Face: 2 Watts
Double Face: 4 Watts

Signtex Inc
LIGHTING
220 VFW Avenue, Grasonville, MD 21638
TEL:(410)827-8300 Fax:(410)827-8866
sales@signtexinc.com www.signtexinc.com

DISTRIBUTOR:

Specifications and Dimensions subject to change without notice.

McGraw-Edison

DESCRIPTION

The Galleon™ LED luminaire delivers exceptional performance in a highly scalable, low-profile design. Patented, high-efficiency AccuLED Optics™ system provides uniform and energy conscious illumination to walkways, parking lots, roadways, building areas and security lighting applications. IP66 rated and UL/cUL Listed for wet locations.

Catalog #		**Type**
Project		
Comments		**Date**
Prepared by		

SPECIFICATION FEATURES

Construction
Extruded aluminum driver enclosure thermally isolated from Light Squares for optimal thermal performance. Heavy-wall, die-cast aluminum end caps enclose housing and die-cast aluminum heat sinks. A unique, patent pending interlocking housing and heat sink provides scalability with superior structural rigidity. 3G vibration tested and rated. Optional tool-less hardware available for ease of entry into electrical chamber. Housing is IP66 rated.

Optics
Patented, high-efficiency injection-molded AccuLED Optics technology. Optics are precisely designed to shape the distribution maximizing efficiency and application spacing. AccuLED Optics create consistent distributions with the scalability to meet customized application requirements. Offered standard in 4000K (+/- 275K) CCT 70 CRI. Optional 3000K, 5000K and 6000K CCT.

Electrical
LED drivers are mounted to removable tray assembly for ease of maintenance. 120-277V 50/60Hz, 347V 60Hz or 480V 60Hz operation. 480V is compatible for use with 480V Wye systems only. Standard with 0-10V dimming. Shipped standard with Eaton proprietary circuit module designed to withstand 10kV of transient line surge. The Galleon LED luminaire is suitable for operation in -40°C to 40°C ambient environments. For applications with ambient temperatures exceeding 40°C, specify the HA (High Ambient) option. Light Squares are IP66 rated. Greater than 90% lumen maintenance expected at 60,000 hours. Available in standard 1A drive current and optional 600mA, 800mA and 1200mA drive currents (nominal).

Mounting
STANDARD ARM MOUNT: Extruded aluminum arm includes internal bolt guides allowing for easy positioning of fixture during mounting. When mounting two or more luminaires at 90° and 120° apart, the EA extended arm may be required. Refer to the arm mounting requirement table. Round pole adapter included. For wall mounting, specify wall mount bracket option. QUICK MOUNT ARM: Adapter is bolted directly to the pole. Quick mount arm slide into place on the adapter and is secured via two screws, facilitating quick and easy installation. The versatile, patent pending, quick mount arm accommodates multiple drill patterns ranging from 1-1/2" to 4-7/8". Removal of the door on the quick mount arm enables wiring of the fixture without having to access the driver compartment. A knock-out enables round pole mounting.

Finish
Housing finished in super durable TGIC polyester powder coat paint, 2.5 mil nominal thickness for superior protection against fade and wear. Heat sink is powder coated black. Standard housing colors include black, bronze, grey, white, dark platinum and graphite metallic. RAL and custom color matches available.

Warranty
Five-year warranty.

GLEON
GALLEON LED

1-10 Light Squares

Solid State LED

AREA/SITE LUMINAIRE

DIMENSIONS

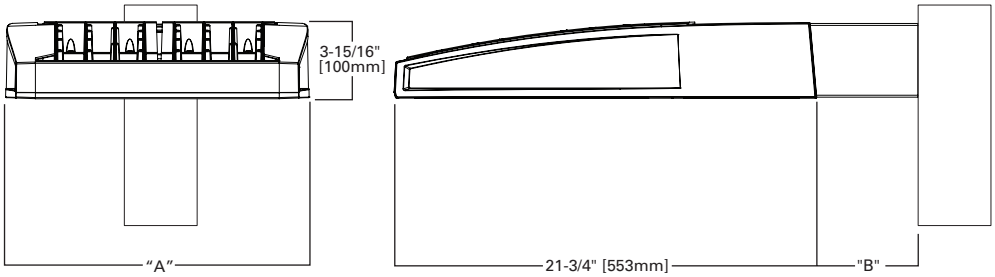

DIMENSION DATA

Number of Light Squares	"A" Width	"B" Standard Arm Length	"B" Optional Arm Length [1]	Weight with Arm (lbs.)	EPA with Arm [2] (Sq. Ft.)
1-4	15-1/2" (394mm)	7" (178mm)	10" (254mm)	33 (15.0 kgs.)	0.96
5-6	21-5/8" (549mm)	7" (178mm)	10" (254mm)	44 (20.0 kgs.)	1.00
7-8	27-5/8" (702mm)	7" (178mm)	13" (330mm)	54 (24.5 kgs.)	1.07
9-10	33-3/4" (857mm)	7" (178mm)	16" (406mm)	63 (28.6 kgs.)	1.12

NOTES: 1. Optional arm length to be used when mounting two fixtures at 90° on a single pole. **2.** EPA calculated with optional arm length.

DRILLING PATTERN

TYPE "N"

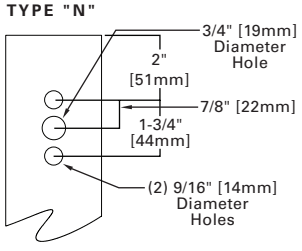

CERTIFICATION DATA
UL/cUL Wet Location Listed
ISO 9001
LM79 / LM80 Compliant
3G Vibration Rated
IP66 Rated
DesignLights Consortium™ Qualified*

ENERGY DATA
Electronic LED Driver
>0.9 Power Factor
<20% Total Harmonic Distortion
120V-277V 50/60Hz
347V & 480V 60Hz
-40°C Min. Temperature
40°C Max. Temperature
50°C Max. Temperature (HA Option)

*www.designlights.org

ARM MOUNTING REQUIREMENTS

Configuration	90° Apart	120° Apart
GLEON-AF-01	7" Arm (Standard)	7" Arm (Standard)
GLEON-AF-02	7" Arm (Standard)	7" Arm (Standard)
GLEON-AF-03	7" Arm (Standard)	7" Arm (Standard)
GLEON-AF-04	7" Arm (Standard)	7" Arm (Standard)
GLEON-AF-05	10" Extended Arm (Required)	7" Arm (Standard)
GLEON-AF-06	10" Extended Arm (Required)	7" Arm (Standard)
GLEON-AF-07	13" Extended Arm (Required)	13" Extended Arm (Required)
GLEON-AF-08	13" Extended Arm (Required)	13" Extended Arm (Required)
GLEON-AF-09	16" Extended Arm (Required)	16" Extended Arm (Required)
GLEON-AF-10	16" Extended Arm (Required)	16" Extended Arm (Required)

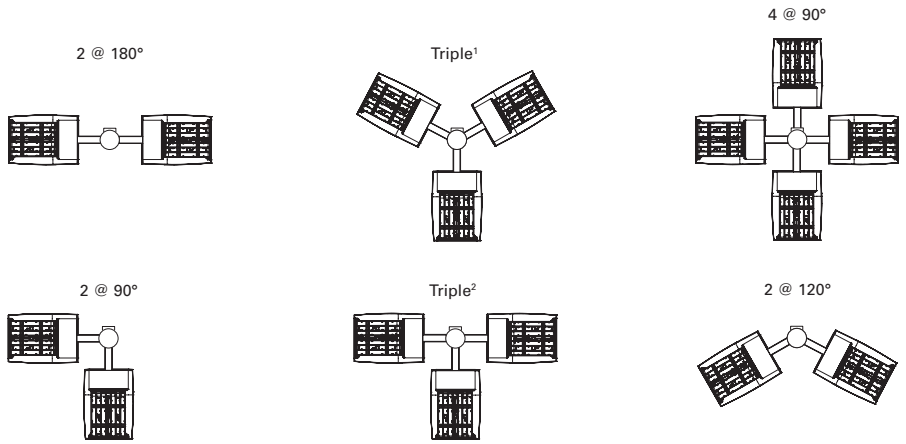

NOTES: 1 Round poles are 3 @ 120°. Square poles are 3 @ 90°. **2** Round poles are 3 @ 90°.

STANDARD WALL MOUNT

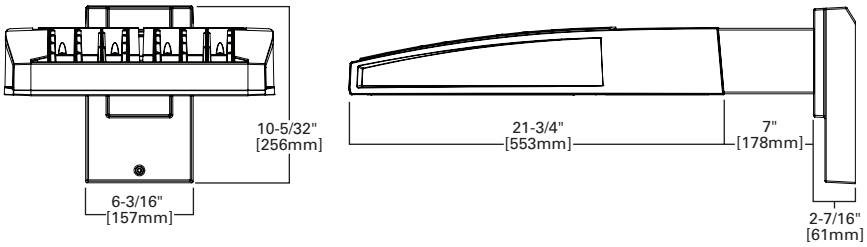

MAST ARM MOUNT

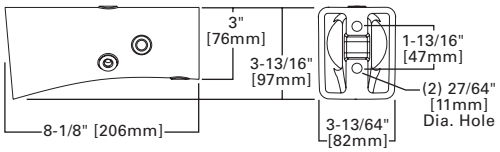

QUICK MOUNT ARM (INCLUDES FIXTURE ADAPTER)

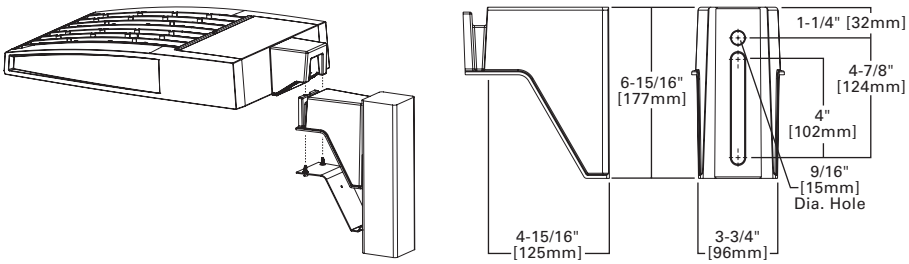

QM Quick Mount Arm (Standard)

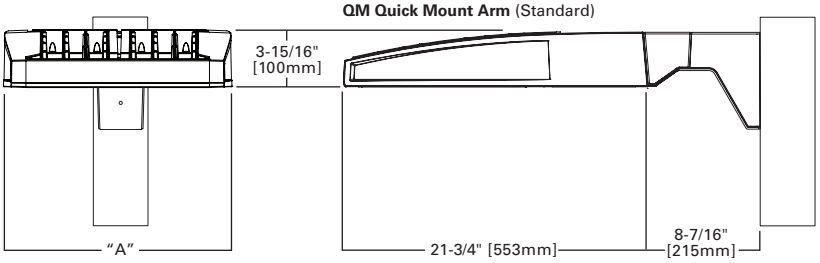

QMEA Quick Mount Arm (Extended)

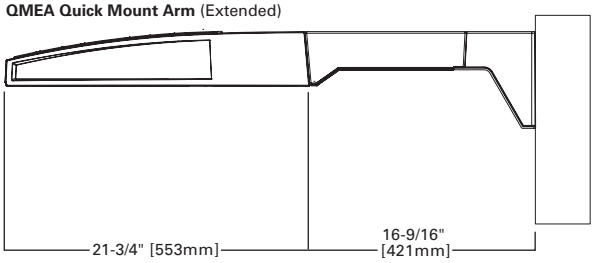

QUICK MOUNT ARM DATA

Number of Light Squares [1,2]	"A" Width	Weight with QM Arm (lbs.)	Weight with QMEA Arm (lbs.)	EPA (Sq. Ft.)
1-4	15-1/2" (394mm)	35 (15.91 kgs.)	38 (17.27 kgs.)	1.11
5-6 [3]	21-5/8" (549mm)	46 (20.91 kgs.)	49 (22.27 kgs.)	
7-8	27-5/8" (702mm)	56 (25.45 kgs.)	59 (26.82 kgs.)	

NOTES: 1 QM option available with 1-8 light square configurations. **2** QMEA option available with 1-6 light square configurations. **3** QMEA arm to be used when mounting two fixtures at 90° on a single pole.

Powering Business Worldwide

Eaton
1121 Highway 74 South
Peachtree City, GA 30269
P: 770-486-4800
www.eaton.com/lighting

Specifications and dimensions subject to change without notice.

OPTIC ORIENTATION

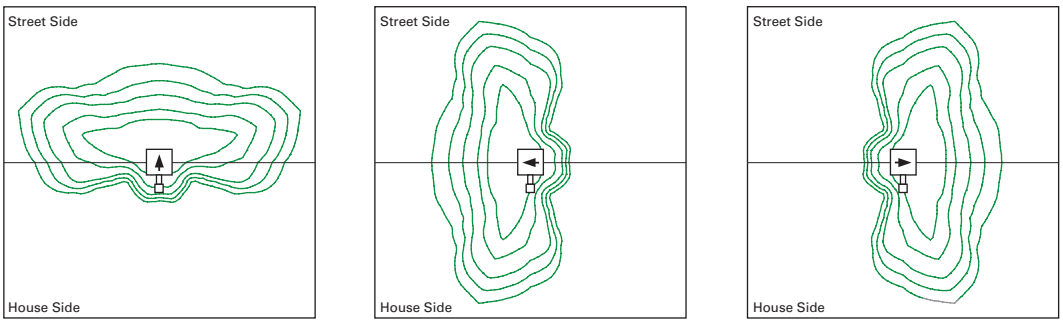

Standard | **Optics Rotated Left @ 90°** [L90] | **Optics Rotated Right @ 90°** [R90]

OPTICAL DISTRIBUTIONS

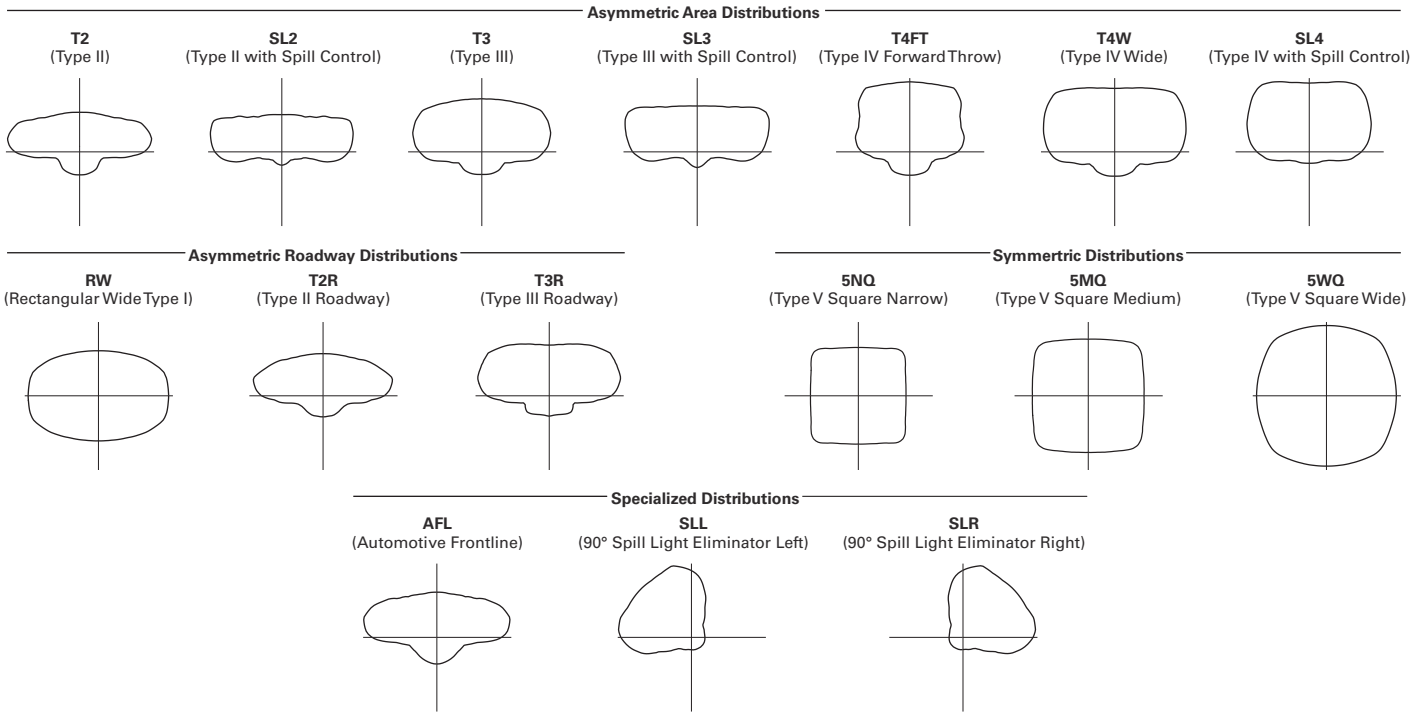

LUMEN MAINTENANCE

Drive Current	Ambient Temperature	TM-21 Lumen Maintenance (60,000 Hours)	Projected L70 (Hours)
Up to 1A	Up to 50°C	> 95%	416,000
1.2A	Up to 40°C	> 90%	205,000

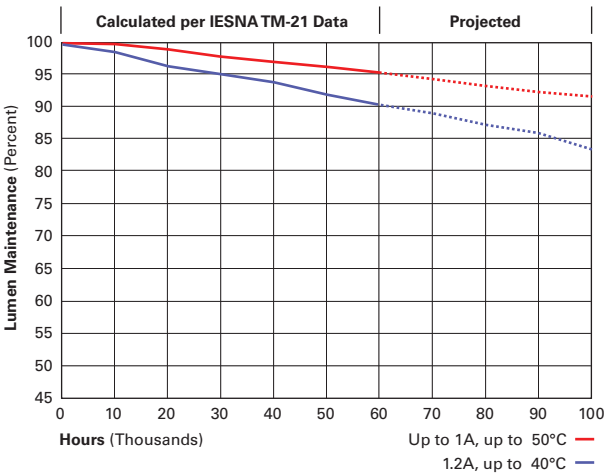

LUMEN MULTIPLIER

Ambient Temperature	Lumen Multiplier
0°C	1.02
10°C	1.01
25°C	1.00
40°C	0.99
50°C	0.97

Powering Business Worldwide

Eaton
1121 Highway 74 South
Peachtree City, GA 30269
P: 770-486-4800
www.eaton.com/lighting

Specifications and dimensions subject to change without notice.

NOMINAL POWER LUMENS (1.2A)

Number of Light Squares		1	2	3	4	5	6	7	8	9	10
Nominal Power (Watts)		67	129	191	258	320	382	448	511	575	640
Input Current @ 120V (A)		0.58	1.16	1.78	2.31	2.94	3.56	4.09	4.71	5.34	5.87
Input Current @ 208V (A)		0.33	0.63	0.93	1.27	1.57	1.87	2.22	2.52	2.8	3.14
Input Current @ 240V (A)		0.29	0.55	0.80	1.10	1.35	1.61	1.93	2.18	2.41	2.71
Input Current @ 277V (A)		0.25	0.48	0.70	0.96	1.18	1.39	1.69	1.90	2.09	2.36
Input Current @ 347V (A)		0.20	0.39	0.57	0.78	0.96	1.15	1.36	1.54	1.72	1.92
Input Current @ 480V (A)		0.15	0.30	0.43	0.60	0.73	0.85	1.03	1.16	1.28	1.45
Optics											
T2	4000K/5000K Lumens	6,709	13,111	19,562	25,848	32,026	38,325	45,324	51,355	57,286	63,424
	3000K Lumens	5,939	11,606	17,316	22,881	28,349	33,925	40,121	45,459	50,710	56,143
	BUG Rating	B1-U0-G2	B2-U0-G2	B3-U0-G3	B3-U0-G4	B3-U0-G4	B3-U0-G5	B4-U0-G5	B4-U0-G5	B4-U0-G5	B4-U0-G5
T2R	4000K/5000K Lumens	7,122	13,919	20,769	27,442	34,000	40,687	48,117	54,519	60,816	67,333
	3000K Lumens	5,939	11,606	17,316	22,881	28,349	33,925	40,121	45,459	50,710	56,143
	BUG Rating	B1-U0-G1	B2-U0-G2	B2-U0-G3	B3-U0-G3	B3-U0-G4	B3-U0-G4	B3-U0-G5	B3-U0-G5	B4-U0-G5	B4-U0-G5
T3	4000K/5000K Lumens	6,838	13,363	19,939	26,346	32,642	39,062	46,196	52,343	58,388	64,646
	3000K Lumens	6,053	11,829	17,650	23,321	28,895	34,578	40,893	46,334	51,685	57,225
	BUG Rating	B1-U0-G2	B2-U0-G2	B3-U0-G3	B3-U0-G4	B3-U0-G4	B3-U0-G5	B4-U0-G5	B4-U0-G5	B4-U0-G5	B4-U0-G5
T3R	4000K/5000K Lumens	6,990	13,660	20,382	26,931	33,368	39,930	47,223	53,506	59,686	66,081
	3000K Lumens	6,188	12,092	18,042	23,839	29,537	35,346	41,802	47,364	52,834	58,495
	BUG Rating	B1-U0-G2	B2-U0-G3	B2-U0-G3	B3-U0-G4	B3-U0-G5	B3-U0-G5	B3-U0-G5	B3-U0-G5	B4-U0-G5	B4-U0-G5
T4FT	4000K/5000K Lumens	6,878	13,440	20,055	26,499	32,832	39,289	46,464	52,646	58,726	65,020
	3000K Lumens	6,088	11,897	17,753	23,457	29,063	34,779	41,130	46,602	51,984	57,556
	BUG Rating	B1-U0-G2	B2-U0-G3	B2-U0-G4	B3-U0-G4	B3-U0-G5	B3-U0-G5	B3-U0-G5	B4-U0-G5	B4-U0-G5	B4-U0-G5
T4W	4000K/5000K Lumens	6,789	13,267	19,795	26,156	32,408	38,781	45,864	51,967	57,968	64,180
	3000K Lumens	6,010	11,744	17,523	23,153	28,688	34,329	40,599	46,001	51,313	56,812
	BUG Rating	B1-U0-G2	B2-U0-G3	B3-U0-G4	B3-U0-G4	B3-U0-G5	B3-U0-G5	B4-U0-G5	B4-U0-G5	B4-U0-G5	B4-U0-G5
SL2	4000K/5000K Lumens	6,697	13,088	19,529	25,804	31,970	38,259	45,245	51,267	57,186	63,315
	3000K Lumens	5,928	11,585	17,287	22,842	28,300	33,867	40,051	45,382	50,621	56,046
	BUG Rating	B1-U0-G2	B2-U0-G3	B3-U0-G3	B3-U0-G4	B3-U0-G4	B3-U0-G5	B4-U0-G5	B4-U0-G5	B4-U0-G5	B4-U0-G5
SL3	4000K/5000K Lumens	6,837	13,361	19,936	26,342	32,639	39,057	46,189	52,336	58,380	64,636
	3000K Lumens	6,052	11,827	17,647	23,318	28,892	34,573	40,887	46,328	51,678	57,216
	BUG Rating	B1-U0-G2	B2-U0-G3	B2-U0-G4	B3-U0-G4	B3-U0-G5	B3-U0-G5	B3-U0-G5	B4-U0-G5	B4-U0-G5	B4-U0-G5
SL4	4000K/5000K Lumens	6,496	12,695	18,943	25,029	31,011	37,110	43,886	49,727	55,470	61,414
	3000K Lumens	5,750	11,238	16,768	22,156	27,451	32,850	38,848	44,018	49,102	54,364
	BUG Rating	B1-U0-G2	B1-U0-G3	B2-U0-G4	B2-U0-G4	B2-U0-G5	B3-U0-G5	B3-U0-G5	B3-U0-G5	B3-U0-G5	B3-U0-G5
5NQ	4000K/5000K Lumens	7,052	13,781	20,564	27,171	33,664	40,285	47,641	53,981	60,215	66,669
	3000K Lumens	6,242	12,199	18,203	24,052	29,799	35,660	42,172	47,784	53,302	59,015
	BUG Rating	B3-U0-G1	B3-U0-G2	B4-U0-G2	B4-U0-G2	B5-U0-G2	B5-U0-G3	B5-U0-G3	B5-U0-G4	B5-U0-G4	B5-U0-G4
5MQ	4000K/5000K Lumens	7,182	14,034	20,942	27,671	34,284	41,027	48,518	54,975	61,323	67,896
	3000K Lumens	6,358	12,423	18,538	24,494	30,348	36,317	42,948	48,664	54,283	60,102
	BUG Rating	B3-U0-G1	B4-U0-G2	B4-U0-G2	B5-U0-G3	B5-U0-G4	B5-U0-G4	B5-U0-G4	B5-U0-G5	B5-U0-G5	B5-U0-G5
5WQ	4000K/5000K Lumens	7,201	14,073	20,998	27,744	34,375	41,136	48,648	55,121	61,487	68,077
	3000K Lumens	6,374	12,457	18,587	24,559	30,429	36,414	43,063	48,793	54,428	60,262
	BUG Rating	B3-U0-G2	B4-U0-G2	B5-U0-G3	B5-U0-G4	B5-U0-G4	B5-U0-G4	B5-U0-G5	B5-U0-G5	B5-U0-G5	B5-U0-G5
SLL/SLR	4000K/5000K Lumens	6,009	11,741	17,519	23,148	28,681	34,321	40,589	45,990	51,301	56,798
	3000K Lumens	5,319	10,393	15,508	20,491	25,388	30,381	35,929	40,710	45,412	50,278
	BUG Rating	B1-U0-G2	B2-U0-G3	B2-U0-G3	B3-U0-G4	B3-U0-G4	B3-U0-G5	B3-U0-G5	B3-U0-G5	B3-U0-G5	B4-U0-G5
RW	4000K/5000K Lumens	6,989	13,657	20,378	26,925	33,360	39,921	47,211	53,494	59,672	66,066
	3000K Lumens	6,187	12,089	18,039	23,834	29,530	35,338	41,791	47,353	52,822	58,482
	BUG Rating	B3-U0-G1	B3-U0-G2	B4-U0-G2	B4-U0-G2	B5-U0-G3	B5-U0-G3	B5-U0-G4	B5-U0-G4	B5-U0-G4	B5-U0-G4
AFL	4000K/5000K Lumens	7,014	13,706	20,452	27,023	33,481	40,066	47,383	53,688	59,888	66,306
	3000K Lumens	6,209	12,133	18,104	23,921	29,637	35,466	41,943	47,525	53,013	58,694
	BUG Rating	B1-U0-G1	B2-U0-G2	B2-U0-G2	B3-U0-G3	B3-U0-G3	B3-U0-G3	B3-U0-G3	B3-U0-G4	B4-U0-G4	B4-U0-G4

* Nominal data for 70 CRI.

NOMINAL POWER LUMENS (1A)

Number of Light Squares		1	2	3	4	5	6	7	8	9	10
Nominal Power (Watts)		59	113	166	225	279	333	391	445	501	558
Input Current @ 120V (A)		0.51	1.02	1.53	2.03	2.55	3.06	3.56	4.08	4.6	5.07
Input Current @ 208V (A)		0.29	0.56	0.82	1.11	1.37	1.64	1.93	2.19	2.46	2.75
Input Current @ 240V (A)		0.26	0.48	0.71	0.96	1.19	1.41	1.67	1.89	2.12	2.39
Input Current @ 277V (A)		0.23	0.42	0.61	0.83	1.03	1.23	1.45	1.65	1.84	2.09
Input Current @ 347V (A)		0.17	0.32	0.50	0.64	0.82	1.00	1.14	1.32	1.50	1.68
Input Current @ 480V (A)		0.14	0.24	0.37	0.48	0.61	0.75	0.91	0.99	1.12	1.28
Optics											
T2	4000K/5000K Lumens	6,116	11,951	17,833	23,563	29,195	34,937	41,317	46,814	52,221	57,817
	3000K Lumens	5,414	10,579	15,786	20,858	25,843	30,926	36,574	41,440	46,226	51,180
	BUG Rating	B1-U0-G2	B2-U0-G2	B3-U0-G3	B3-U0-G3	B3-U0-G4	B3-U0-G4	B4-U0-G5	B4-U0-G5	B4-U0-G5	B4-U0-G5
T2R	4000K/5000K Lumens	6,493	12,688	18,932	25,015	30,994	37,090	43,863	49,699	55,439	61,380
	3000K Lumens	5,748	11,231	16,759	22,143	27,436	32,832	38,828	43,994	49,075	54,334
	BUG Rating	B1-U0-G1	B2-U0-G2	B2-U0-G2	B3-U0-G3	B3-U0-G4	B3-U0-G4	B3-U0-G4	B3-U0-G5	B4-U0-G5	B4-U0-G5
T3	4000K/5000K Lumens	6,234	12,181	18,176	24,017	29,756	35,609	42,111	47,715	53,225	58,930
	3000K Lumens	5,518	10,783	16,089	21,260	26,340	31,521	37,277	42,237	47,115	52,165
	BUG Rating	B1-U0-G2	B2-U0-G2	B3-U0-G3	B3-U0-G4	B3-U0-G4	B3-U0-G5	B4-U0-G5	B4-U0-G5	B4-U0-G5	B4-U0-G5
T3R	4000K/5000K Lumens	6,372	12,453	18,580	24,550	30,418	36,400	43,048	48,776	54,409	60,239
	3000K Lumens	5,640	11,023	16,447	21,732	26,926	32,221	38,106	43,177	48,163	53,324
	BUG Rating	B1-U0-G2	B2-U0-G2	B2-U0-G3	B3-U0-G4	B3-U0-G4	B3-U0-G5	B3-U0-G5	B3-U0-G5	B3-U0-G5	B4-U0-G5
T4FT	4000K/5000K Lumens	6,270	12,252	18,282	24,156	29,929	35,815	42,356	47,992	53,534	59,271
	3000K Lumens	5,550	10,845	16,183	21,383	26,493	31,703	37,494	42,483	47,388	52,467
	BUG Rating	B1-U0-G2	B2-U0-G2	B2-U0-G3	B3-U0-G4	B3-U0-G5	B3-U0-G5	B3-U0-G5	B3-U0-G5	B4-U0-G5	B4-U0-G5
T4W	4000K/5000K Lumens	6,189	12,094	18,045	23,844	29,543	35,352	41,809	47,372	52,843	58,506
	3000K Lumens	5,479	10,706	15,973	21,107	26,151	31,294	37,009	41,934	46,777	51,790
	BUG Rating	B1-U0-G2	B2-U0-G2	B3-U0-G3	B3-U0-G4	B3-U0-G5	B3-U0-G5	B4-U0-G5	B4-U0-G5	B4-U0-G5	B4-U0-G5
SL2	4000K/5000K Lumens	6,105	11,931	17,803	23,522	29,144	34,877	41,245	46,734	52,130	57,717
	3000K Lumens	5,404	10,561	15,759	20,822	25,798	30,873	36,510	41,369	46,145	51,091
	BUG Rating	B1-U0-G2	B2-U0-G3	B3-U0-G3	B3-U0-G4	B3-U0-G4	B3-U0-G5	B4-U0-G5	B4-U0-G5	B4-U0-G5	B4-U0-G5
SL3	4000K/5000K Lumens	6,233	12,180	18,174	24,013	29,753	35,604	42,106	47,708	53,218	58,921
	3000K Lumens	5,517	10,782	16,088	21,256	26,337	31,517	37,272	42,231	47,109	52,157
	BUG Rating	B1-U0-G2	B2-U0-G3	B2-U0-G3	B3-U0-G4	B3-U0-G4	B3-U0-G5	B3-U0-G5	B3-U0-G5	B4-U0-G5	B4-U0-G5
SL4	4000K/5000K Lumens	5,922	11,572	17,268	22,816	28,269	33,829	40,006	45,330	50,566	55,984
	3000K Lumens	5,242	10,244	15,286	20,197	25,024	29,945	35,413	40,126	44,761	49,557
	BUG Rating	B1-U0-G2	B1-U0-G3	B2-U0-G3	B2-U0-G4	B2-U0-G5	B3-U0-G5	B3-U0-G5	B3-U0-G5	B3-U0-G5	B3-U0-G5
5NQ	4000K/5000K Lumens	6,429	12,563	18,746	24,768	30,688	36,723	43,429	49,208	54,891	60,775
	3000K Lumens	5,691	11,121	16,594	21,925	27,165	32,507	38,443	43,559	48,590	53,798
	BUG Rating	B2-U0-G1	B3-U0-G2	B4-U0-G2	B4-U0-G2	B5-U0-G2	B5-U0-G3	B5-U0-G3	B5-U0-G3	B5-U0-G4	B5-U0-G4
5MQ	4000K/5000K Lumens	6,547	12,794	19,090	25,224	31,253	37,400	44,228	50,114	55,902	61,893
	3000K Lumens	5,795	11,325	16,898	22,328	27,665	33,106	39,151	44,361	49,484	54,788
	BUG Rating	B3-U0-G1	B4-U0-G2	B4-U0-G2	B5-U0-G3	B5-U0-G3	B5-U0-G4	B5-U0-G4	B5-U0-G4	B5-U0-G5	B5-U0-G5
5WQ	4000K/5000K Lumens	6,564	12,828	19,141	25,291	31,336	37,499	44,347	50,248	56,051	62,058
	3000K Lumens	5,810	11,355	16,944	22,388	27,739	33,194	39,256	44,480	49,616	54,934
	BUG Rating	B3-U0-G2	B4-U0-G2	B5-U0-G3	B5-U0-G3	B5-U0-G4	B5-U0-G4	B5-U0-G5	B5-U0-G5	B5-U0-G5	B5-U0-G5
SLL/SLR	4000K/5000K Lumens	5,478	10,703	15,970	21,102	26,145	31,286	37,001	41,924	46,765	51,777
	3000K Lumens	4,849	9,474	14,137	18,679	23,144	27,694	32,753	37,111	41,396	45,833
	BUG Rating	B1-U0-G2	B1-U0-G3	B2-U0-G3	B2-U0-G4	B3-U0-G4	B3-U0-G5	B3-U0-G5	B3-U0-G5	B3-U0-G5	B3-U0-G5
RW	4000K/5000K Lumens	6,371	12,449	18,576	24,544	30,411	36,392	43,037	48,764	54,396	60,225
	3000K Lumens	5,640	11,020	16,443	21,726	26,920	32,214	38,096	43,166	48,151	53,311
	BUG Rating	B3-U0-G1	B3-U0-G2	B4-U0-G2	B4-U0-G2	B5-U0-G3	B5-U0-G3	B5-U0-G3	B5-U0-G4	B5-U0-G4	B5-U0-G4
AFL	4000K/5000K Lumens	6,394	12,494	18,644	24,634	30,521	36,524	43,194	48,942	54,593	60,444
	3000K Lumens	5,660	11,060	16,504	21,806	27,017	32,331	38,235	43,323	48,326	53,505
	BUG Rating	B1-U0-G1	B2-U0-G2	B2-U0-G2	B3-U0-G2	B3-U0-G3	B3-U0-G3	B3-U0-G3	B3-U0-G3	B4-U0-G4	B4-U0-G4

* Nominal data for 70 CRI.

NOMINAL POWER LUMENS (800MA)

Number of Light Squares		1	2	3	4	5	6	7	8	9	10
Nominal Power (Watts)		44	85	124	171	210	249	295	334	374	419
Input Current @ 120V (A)		0.39	0.77	1.13	1.54	1.90	2.26	2.67	3.03	3.39	3.80
Input Current @ 208V (A)		0.22	0.44	0.62	0.88	1.06	1.24	1.50	1.68	1.87	2.12
Input Current @ 240V (A)		0.19	0.38	0.54	0.76	0.92	1.08	1.30	1.46	1.62	1.84
Input Current @ 277V (A)		0.17	0.36	0.47	0.72	0.83	0.95	1.19	1.31	1.42	1.67
Input Current @ 347V (A)		0.15	0.24	0.38	0.49	0.63	0.77	0.87	1.01	1.15	1.52
Input Current @ 480V (A)		0.11	0.18	0.29	0.37	0.48	0.59	0.66	0.77	0.88	0.96
Optics											
T2	4000K/5000K Lumens	4,941	9,656	14,408	19,038	23,588	28,227	33,382	37,823	42,191	46,713
	3000K Lumens	4,374	8,547	12,754	16,852	20,880	24,987	29,550	33,481	37,347	41,350
	BUG Rating	B1-U0-G1	B2-U0-G2	B2-U0-G2	B3-U0-G3	B3-U0-G3	B3-U0-G4	B3-U0-G4	B3-U0-G4	B4-U0-G5	B4-U0-G5
T2R	4000K/5000K Lumens	5,246	10,251	15,296	20,211	25,041	29,966	35,439	40,154	44,791	49,592
	3000K Lumens	4,644	9,074	13,540	17,891	22,166	26,526	31,371	35,544	39,649	43,899
	BUG Rating	B1-U0-G1	B1-U0-G2	B2-U0-G2	B2-U0-G3	B3-U0-G3	B3-U0-G4	B3-U0-G4	B3-U0-G4	B3-U0-G4	B3-U0-G5
T3	4000K/5000K Lumens	5,037	9,842	14,685	19,404	24,041	28,770	34,024	38,551	43,003	47,612
	3000K Lumens	4,459	8,712	12,999	17,176	21,281	25,467	30,118	34,125	38,066	42,146
	BUG Rating	B1-U0-G1	B2-U0-G2	B2-U0-G3	B3-U0-G3	B3-U0-G4	B3-U0-G4	B3-U0-G4	B3-U0-G5	B4-U0-G5	B4-U0-G5
T3R	4000K/5000K Lumens	5,148	10,061	15,011	19,835	24,576	29,409	34,780	39,408	43,959	48,669
	3000K Lumens	4,557	8,906	13,288	17,558	21,755	26,033	30,787	34,884	38,913	43,082
	BUG Rating	B1-U0-G2	B1-U0-G2	B2-U0-G3	B2-U0-G3	B3-U0-G4	B3-U0-G4	B3-U0-G5	B3-U0-G5	B3-U0-G5	B3-U0-G5
T4FT	4000K/5000K Lumens	5,066	9,899	14,770	19,516	24,181	28,936	34,221	38,774	43,252	47,888
	3000K Lumens	4,484	8,763	13,074	17,276	21,405	25,614	30,292	34,323	38,287	42,390
	BUG Rating	B1-U0-G2	B1-U0-G2	B2-U0-G3	B2-U0-G4	B3-U0-G4	B3-U0-G4	B3-U0-G5	B3-U0-G5	B3-U0-G5	B3-U0-G5
T4W	4000K/5000K Lumens	5,000	9,771	14,579	19,264	23,869	28,562	33,779	38,274	42,694	47,269
	3000K Lumens	4,426	8,649	12,905	17,052	21,129	25,283	29,901	33,880	37,793	41,843
	BUG Rating	B1-U0-G2	B2-U0-G2	B2-U0-G3	B3-U0-G4	B3-U0-G4	B3-U0-G4	B3-U0-G5	B3-U0-G5	B4-U0-G5	B4-U0-G5
SL2	4000K/5000K Lumens	4,933	9,639	14,383	19,005	23,547	28,178	33,324	37,758	42,118	46,632
	3000K Lumens	4,367	8,532	12,732	16,823	20,844	24,943	29,498	33,423	37,283	41,279
	BUG Rating	B1-U0-G2	B2-U0-G2	B2-U0-G3	B3-U0-G3	B3-U0-G4	B3-U0-G4	B3-U0-G4	B3-U0-G5	B4-U0-G5	B4-U0-G5
SL3	4000K/5000K Lumens	5,036	9,841	14,683	19,401	24,039	28,766	34,019	38,546	42,997	47,605
	3000K Lumens	4,458	8,711	12,997	17,174	21,279	25,464	30,114	34,121	38,061	42,140
	BUG Rating	B1-U0-G2	B1-U0-G2	B2-U0-G3	B2-U0-G3	B3-U0-G4	B3-U0-G4	B3-U0-G5	B3-U0-G5	B3-U0-G5	B3-U0-G5
SL4	4000K/5000K Lumens	4,784	9,350	13,951	18,434	22,840	27,332	32,323	36,624	40,854	45,232
	3000K Lumens	4,235	8,277	12,349	16,318	20,218	24,194	28,612	32,420	36,164	40,039
	BUG Rating	B1-U0-G2	B1-U0-G3	B1-U0-G3	B2-U0-G4	B2-U0-G4	B2-U0-G5	B2-U0-G5	B3-U0-G5	B3-U0-G5	B3-U0-G5
5NQ	4000K/5000K Lumens	5,194	10,150	15,145	20,011	24,794	29,670	35,088	39,757	44,349	49,102
	3000K Lumens	4,598	8,985	13,406	17,714	21,948	26,264	31,060	35,193	39,258	43,465
	BUG Rating	B2-U0-G1	B3-U0-G1	B3-U0-G2	B4-U0-G2	B4-U0-G2	B5-U0-G2	B5-U0-G3	B5-U0-G3	B5-U0-G3	B5-U0-G3
5MQ	4000K/5000K Lumens	5,290	10,337	15,424	20,380	25,250	30,217	35,734	40,489	45,165	50,006
	3000K Lumens	4,683	9,150	13,653	18,040	22,351	26,748	31,632	35,841	39,980	44,265
	BUG Rating	B3-U0-G1	B3-U0-G2	B4-U0-G2	B4-U0-G2	B5-U0-G3	B5-U0-G3	B5-U0-G4	B5-U0-G4	B5-U0-G4	B5-U0-G4
5WQ	4000K/5000K Lumens	5,304	10,365	15,465	20,434	25,318	30,297	35,830	40,597	45,286	50,139
	3000K Lumens	4,695	9,175	13,690	18,088	22,411	26,819	31,717	35,936	40,087	44,383
	BUG Rating	B3-U0-G1	B4-U0-G2	B4-U0-G2	B5-U0-G3	B5-U0-G3	B5-U0-G4	B5-U0-G4	B5-U0-G4	B5-U0-G5	B5-U0-G5
SLL/SLR	4000K/5000K Lumens	4,426	8,648	12,903	17,049	21,124	25,278	29,894	33,872	37,784	41,832
	3000K Lumens	3,918	7,655	11,422	15,092	18,699	22,376	26,462	29,983	33,446	37,030
	BUG Rating	B1-U0-G2	B1-U0-G2	B2-U0-G3	B2-U0-G3	B2-U0-G4	B3-U0-G4	B3-U0-G5	B3-U0-G5	B3-U0-G5	B3-U0-G5
RW	4000K/5000K Lumens	5,147	10,058	15,009	19,830	24,570	29,402	34,771	39,399	43,949	48,658
	3000K Lumens	4,556	8,903	13,286	17,554	21,749	26,027	30,779	34,876	38,904	43,072
	BUG Rating	B2-U0-G1	B3-U0-G1	B3-U0-G2	B4-U0-G2	B4-U0-G2	B4-U0-G2	B5-U0-G3	B5-U0-G3	B5-U0-G3	B5-U0-G4
AFL	4000K/5000K Lumens	5,166	10,095	15,063	19,903	24,659	29,509	34,898	39,542	44,108	48,835
	3000K Lumens	4,573	8,936	13,334	17,618	21,828	26,121	30,892	35,003	39,044	43,229
	BUG Rating	B1-U0-G1	B1-U0-G1	B2-U0-G2	B2-U0-G2	B3-U0-G2	B3-U0-G3	B3-U0-G3	B3-U0-G3	B3-U0-G3	B3-U0-G3

* Nominal data for 70 CRI.

NOMINAL POWER LUMENS (600MA)

Number of Light Squares		1	2	3	4	5	6	7	8	9	10
Nominal Power (Watts)		34	66	96	129	162	193	226	257	290	323
Input Current @ 120V (A)		0.30	0.58	0.86	1.16	1.44	1.73	2.03	2.33	2.59	2.89
Input Current @ 208V (A)		0.17	0.34	0.49	0.65	0.84	0.99	1.14	1.30	1.48	1.63
Input Current @ 240V (A)		0.15	0.30	0.43	0.56	0.74	0.87	1.00	1.13	1.30	1.43
Input Current @ 277V (A)		0.14	0.28	0.41	0.52	0.69	0.81	0.93	1.04	1.22	1.33
Input Current @ 347V (A)		0.11	0.19	0.30	0.39	0.49	0.60	0.69	0.77	0.90	0.99
Input Current @ 480V (A)		0.08	0.15	0.24	0.30	0.38	0.48	0.53	0.59	0.71	0.77
Optics											
T2	4000K/5000K Lumens	4,029	7,874	11,749	15,525	19,235	23,019	27,222	30,844	34,406	38,093
	3000K Lumens	3,566	6,970	10,400	13,743	17,027	20,376	24,097	27,303	30,456	33,720
	BUG Rating	B1-U0-G1	B1-U0-G2	B2-U0-G2	B2-U0-G2	B3-U0-G3	B3-U0-G3	B3-U0-G4	B3-U0-G4	B3-U0-G4	B3-U0-G4
T2R	4000K/5000K Lumens	4,278	8,360	12,474	16,482	20,421	24,437	28,900	32,745	36,527	40,441
	3000K Lumens	3,787	7,400	11,042	14,590	18,077	21,632	25,582	28,986	32,334	35,798
	BUG Rating	B1-U0-G1	B1-U0-G2	B2-U0-G2	B2-U0-G2	B2-U0-G3	B3-U0-G3	B3-U0-G3	B3-U0-G4	B3-U0-G4	B3-U0-G4
T3	4000K/5000K Lumens	4,107	8,026	11,976	15,824	19,605	23,461	27,746	31,438	35,068	38,827
	3000K Lumens	3,636	7,105	10,601	14,007	17,354	20,768	24,561	27,829	31,042	34,370
	BUG Rating	B1-U0-G1	B1-U0-G2	B2-U0-G2	B2-U0-G3	B3-U0-G3	B3-U0-G4	B3-U0-G4	B3-U0-G4	B3-U0-G5	B3-U0-G5
T3R	4000K/5000K Lumens	4,198	8,205	12,242	16,175	20,041	23,982	28,363	32,137	35,848	39,689
	3000K Lumens	3,716	7,263	10,837	14,318	17,740	21,229	25,107	28,448	31,733	35,133
	BUG Rating	B1-U0-G1	B1-U0-G2	B2-U0-G2	B2-U0-G3	B2-U0-G3	B3-U0-G4	B3-U0-G4	B3-U0-G4	B3-U0-G5	B3-U0-G5
T4FT	4000K/5000K Lumens	4,131	8,072	12,045	15,915	19,719	23,597	27,907	31,620	35,272	39,052
	3000K Lumens	3,657	7,145	10,662	14,088	17,455	20,888	24,703	27,990	31,223	34,569
	BUG Rating	B1-U0-G1	B1-U0-G2	B2-U0-G2	B2-U0-G3	B2-U0-G4	B3-U0-G4	B3-U0-G4	B3-U0-G5	B3-U0-G5	B3-U0-G5
T4W	4000K/5000K Lumens	4,077	7,968	11,889	15,710	19,465	23,292	27,546	31,212	34,816	38,547
	3000K Lumens	3,609	7,053	10,524	13,906	17,230	20,618	24,384	27,629	30,819	34,122
	BUG Rating	B1-U0-G1	B1-U0-G2	B2-U0-G2	B2-U0-G3	B3-U0-G4	B3-U0-G4	B3-U0-G4	B3-U0-G5	B3-U0-G5	B3-U0-G5
SL2	4000K/5000K Lumens	4,022	7,861	11,729	15,498	19,202	22,979	27,175	30,791	34,347	38,028
	3000K Lumens	3,560	6,959	10,383	13,719	16,998	20,341	24,055	27,256	30,404	33,662
	BUG Rating	B1-U0-G1	B1-U0-G2	B2-U0-G3	B2-U0-G3	B3-U0-G3	B3-U0-G4	B3-U0-G4	B3-U0-G4	B3-U0-G5	B3-U0-G5
SL3	4000K/5000K Lumens	4,106	8,025	11,974	15,821	19,603	23,458	27,742	31,433	35,064	38,821
	3000K Lumens	3,635	7,104	10,599	14,005	17,353	20,765	24,557	27,824	31,039	34,364
	BUG Rating	B1-U0-G1	B1-U0-G2	B2-U0-G3	B2-U0-G3	B2-U0-G3	B3-U0-G4	B3-U0-G4	B3-U0-G4	B3-U0-G5	B3-U0-G5
SL4	4000K/5000K Lumens	3,902	7,624	11,377	15,033	18,626	22,289	26,359	29,867	33,316	36,886
	3000K Lumens	3,454	6,749	10,071	13,307	16,488	19,730	23,333	26,438	29,491	32,651
	BUG Rating	B1-U0-G2	B1-U0-G2	B1-U0-G3	B1-U0-G3	B2-U0-G4	B2-U0-G4	B2-U0-G4	B2-U0-G5	B3-U0-G5	B3-U0-G5
5NQ	4000K/5000K Lumens	4,236	8,277	12,351	16,319	20,219	24,196	28,614	32,422	36,166	40,042
	3000K Lumens	3,750	7,327	10,933	14,446	17,898	21,418	25,329	28,700	32,014	35,445
	BUG Rating	B2-U0-G1	B3-U0-G1	B3-U0-G2	B3-U0-G2	B4-U0-G2	B4-U0-G2	B4-U0-G2	B5-U0-G2	B5-U0-G3	B5-U0-G3
5MQ	4000K/5000K Lumens	4,314	8,429	12,578	16,619	20,591	24,641	29,141	33,019	36,832	40,779
	3000K Lumens	3,819	7,461	11,134	14,711	18,227	21,812	25,796	29,228	32,604	36,098
	BUG Rating	B3-U0-G1	B3-U0-G2	B4-U0-G2	B4-U0-G2	B4-U0-G2	B5-U0-G3	B5-U0-G3	B5-U0-G4	B5-U0-G4	B5-U0-G4
5WQ	4000K/5000K Lumens	4,325	8,452	12,611	16,664	20,646	24,707	29,219	33,106	36,930	40,888
	3000K Lumens	3,828	7,482	11,163	14,751	18,276	21,871	25,865	29,305	32,690	36,194
	BUG Rating	B3-U0-G1	B3-U0-G2	B4-U0-G2	B4-U0-G2	B5-U0-G3	B5-U0-G3	B5-U0-G4	B5-U0-G4	B5-U0-G4	B5-U0-G4
SLL/SLR	4000K/5000K Lumens	3,609	7,052	10,522	13,903	17,226	20,613	24,378	27,622	30,812	34,114
	3000K Lumens	3,195	6,242	9,314	12,307	15,248	18,247	21,579	24,451	27,275	30,198
	BUG Rating	B1-U0-G1	B1-U0-G2	B1-U0-G3	B2-U0-G3	B2-U0-G3	B2-U0-G4	B3-U0-G4	B3-U0-G4	B3-U0-G5	B3-U0-G5
RW	4000K/5000K Lumens	4,197	8,202	12,239	16,171	20,036	23,977	28,356	32,129	35,839	39,680
	3000K Lumens	3,715	7,260	10,834	14,315	17,736	21,224	25,101	28,441	31,725	35,125
	BUG Rating	B2-U0-G1	B3-U0-G1	B3-U0-G2	B4-U0-G2	B4-U0-G2	B4-U0-G2	B4-U0-G2	B5-U0-G3	B5-U0-G3	B5-U0-G3
AFL	4000K/5000K Lumens	4,213	8,232	12,284	16,230	20,109	24,064	28,459	32,246	35,969	39,824
	3000K Lumens	3,729	7,287	10,874	14,367	17,800	21,301	25,192	28,544	31,840	35,252
	BUG Rating	B1-U0-G1	B1-U0-G1	B2-U0-G2	B2-U0-G2	B2-U0-G2	B3-U0-G2	B3-U0-G3	B3-U0-G3	B3-U0-G3	B3-U0-G3

* Nominal data for 70 CRI.

CONTROL OPTIONS

0-10V (DIM)
This fixture is offered standard with 0-10V dimming driver(s). The DIM option provides 0-10V dimming wire leads for use with a lighting control panel or other control method.

Photocontrol (P, R and PER7)
Optional button-type photocontrol (P) and photocontrol receptacles (R and PER7) provide a flexible solution to enable "dusk-to-dawn" lighting by sensing light levels. Advanced control systems compatible with NEMA 7-pin standards can be utilized with the PER7 receptacle.

After Hours Dim (AHD)
This feature allows photocontrol-enabled luminaires to achieve additional energy savings by dimming during scheduled portions of the night. The dimming profile will automatically take effect after a "dusk-to-dawn" period has been calculated from the photocontrol input. Specify the desired dimming profile for a simple, factory-shipped dimming solution requiring no external control wiring. Reference the After Hours Dim supplemental guide for additional information.

Dimming Occupancy Sensor (MS/DIM-LXX, MS/X-LXX and MS-LXX)
These sensors are factory installed in the luminaire housing. When the MS/DIM-LXX sensor option is selected, the occupancy sensor is connected to a dimming driver and the entire luminaire dims when there is no activity detected. When activity is detected, the luminaire returns to full light output. The MS/DIM sensor is factory preset to dim down to approximately 50 percent power with a time delay of five minutes. The MS-LXX sensor is factory preset to turn the luminaire off after five minutes of no activity. The MS/X-LXX is also preset for five minutes and only controls the specified number of light engines to maintain steady output from the remaining light engines.

These occupancy sensors includes an integral photocell that can be activated with the FSIR-100 accessory for "dusk-to-dawn" control or daylight harvesting - the factory preset is OFF. The FSIR-100 is a wireless tool utilized for changing the dimming level, time delay, sensitivity and other parameters.

A variety of sensor lens are available to optimize the coverage pattern for mounting heights from 8'-40'.

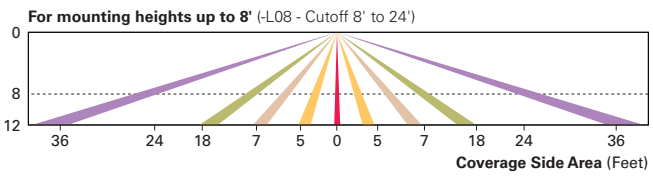

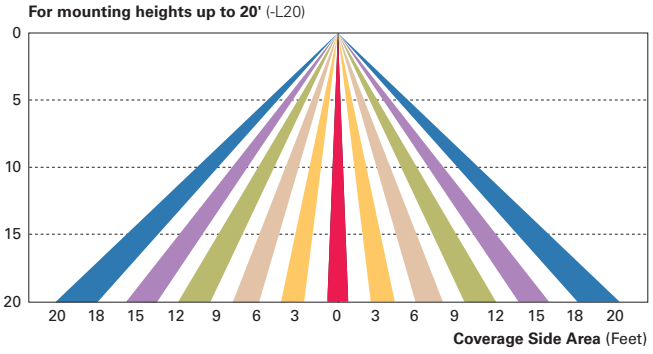

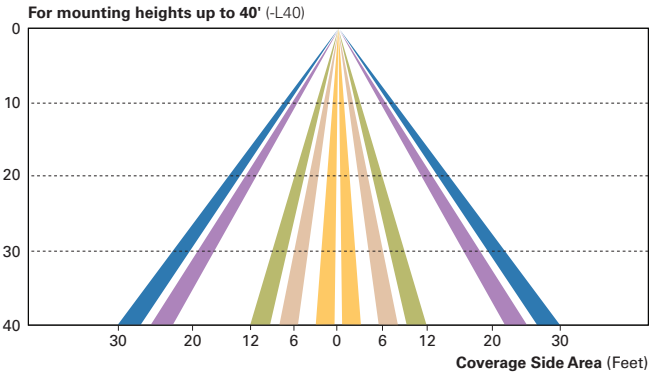

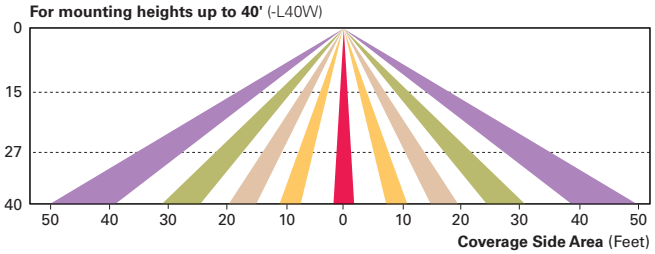

LumaWatt Wireless Control and Monitoring System (LWR-LW and LWR-LN)
The LumaWatt system is a peer-to-peer wireless network of luminaire-integral sensors for any sized project. Each sensor is capable of motion and photo sensing, metering power consumption and wireless communication. The end-user can securely create and manage sensor profiles with browser-based management software. The software will automatically broadcast to the sensors via wireless gateways for zone-based and individual luminaire control. The LumaWatt software provides smart building solutions by utilizing the sensor to provide easy-to-use dashboard and analytic capabilities such as improved energy savings, traffic flow analysis, building management software integration and more.

For additional details, refer to the LumaWatt product guides.

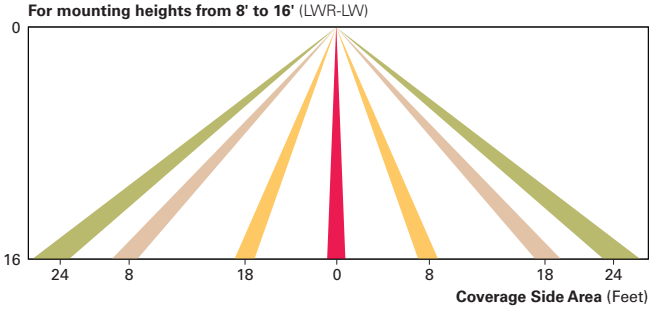

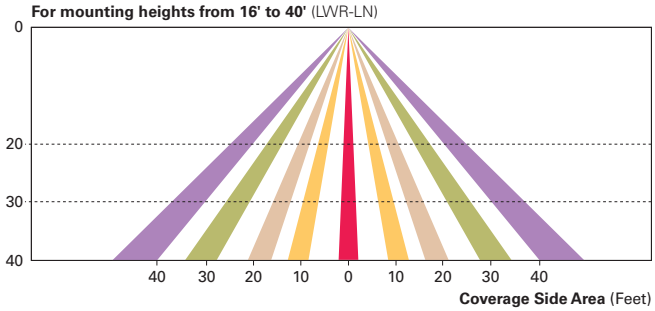

ORDERING INFORMATION

Sample Number: GLEON-AF-04-LED-E1-T3-GM-QM

Product Family [1, 2]	Light Engine	Number of Light Squares [3]	Lamp Type	Voltage	Distribution	Color	Mounting
GLEON=Galleon	**AF**=1A Drive Current	**01**=1 **02**=2 **03**=3 **04**=4 **05**=5 **06**=6 **07**=7 [4] **08**=8 [4] **09**=9 [5] **10**=10 [5]	**LED**=Solid State Light Emitting Diodes	**E1**=120-277V **347**=347V [6] **480**=480V [6, 7]	**T2**=Type II **T2R**=Type II Roadway **T3**=Type III **T3R**=Type III Roadway **T4FT**=Type IV Forward Throw **T4W**=Type IV Wide **5NQ**=Type V Narrow **5MQ**=Type V Square Medium **5WQ**=Type V Square Wide **SL2**=Type II w/Spill Control **SL3**=Type III w/Spill Control **SL4**=Type IV w/Spill Control **SLL**=90° Spill Light Eliminator Left **SLR**=90° Spill Light Eliminator Right **RW**=Rectangular Wide Type I **AFL**=Automotive Frontline	**AP**=Grey **BZ**=Bronze **BK**=Black **DP**=Dark Platinum **GM**=Graphite Metallic **WH**=White	**[Blank]**=Arm for Round or Square Pole **EA**=Extended Arm [8] **MA**=Mast Arm Adapter [9] **WM**=Wall Mount **QM**=Quick Mount Arm (Standard Length) [10] **QMEA**=Quick Mount Arm (Extended Length) [11]

Options (Add as Suffix)

7030=70 CRI 3000K [12]
8030=80 CRI 3000K [13]
7050=70 CRI 5000K [12]
7060=70 CRI 6000K [12]
600=Drive Current Factory Set to Nominal 600mA [14]
800=Drive Current Factory Set to Nominal 800mA [14]
1200=Drive Current Factory Set to Nominal 1200mA [14, 15]
F=Single Fuse (120, 277 or 347V. Must Specify Voltage)
FF=Double Fuse (208, 240 or 480V. Must Specify Voltage)
2L=Two Circuits [16, 17]
DIM=External 0-10V Dimming Leads
P=Button Type Photocontrol (120, 208, 240 or 277V. Must Specify Volatage)
PER7=NEMA 7-PIN Twistlock Photocontrol Receptacle
R=NEMA Twistlock Photocontrol Receptacle
AHD145=After Hours Dim, 5 Hours [18]
AHD245=After Hours Dim, 6 Hours [18]
AHD255=After Hours Dim, 7 Hours [18]
AHD355=After Hours Dim, 8 Hours [18]
HA=50°C High Ambient [19]
MS/DIM-L08=Motion Sensor for Dimming Operation, Maximum 8' Mounting Height [20, 21]
MS/DIM-L20=Motion Sensor for Dimming Operation, 9' - 20' Mounting Height [20, 22]
MS/DIM-L40=Motion Sensor for Dimming Operation, 21' - 40' Mounting Height [20, 23]
MS/DIM-L40W=Motion Sensor for Dimming Operation, 21' - 40' Mounting Height (Wide Range) [20, 24]
MS/X-L08=Bi-Level Motion Sensor, Maximum 8' Mounting Height [20, 21, 25]
MS/X-L20=Bi-Level Motion Sensor, 9' - 20' Mounting Height [20, 22, 25]
MS/X-L40=Bi-Level Motion Sensor, 21' - 40' Mounting Height [20, 23, 25]
MS/X-L40W=Bi-Level Motion Sensor, 21' - 40' Mounting Height (Wide Range) [20, 24, 25]
MS-L08=Motion Sensor for ON/OFF Operation, Maximum 8' Mounting Height [20, 21]
MS-L20=Motion Sensor for ON/OFF Operation, 9' - 20' Mounting Height [20, 22]
MS-L40=Motion Sensor for ON/OFF Operation, 21' - 40' Mounting Height [20, 23]
MS-L40W=Motion Sensor for ON/OFF Operation, 21' - 40' Mounting Height (Wide Range) [20, 24]
LWR-LW=LumaWatt Wireless Sensor, Wide Lens for 8' - 16' Mounting Height [26]
LWR-LN=LumaWatt Wireless Sensor, Narrow Lens for 16' - 40' Mounting Height [26]
L90=Optics Rotated 90° Left
R90=Optics Rotated 90° Right
MT=Factory Installed Mesh Top
TH=Tool-less Door Hardware
LCF=Light Square Trim Plate Painted to Match Housing [27]
HSS=Factory Installed House Side Shield [28]
CE=CE Marking [29]

Accessories (Order Separately)

OA/RA1016=NEMA Photocontrol Multi-Tap - 105-285V
OA/RA1027=NEMA Photocontrol - 480V
OA/RA1201=NEMA Photocontrol - 347V
OA/RA1013=Photocontrol Shorting Cap
OA/RA1014=120V Photocontrol
MA1252=10kV Surge Module Replacement
MA1036-XX=Single Tenon Adapter for 2-3/8" O.D. Tenon
MA1037-XX=2@180° Tenon Adapter for 2-3/8" O.D. Tenon
MA1197-XX=3@120° Tenon Adapter for 2-3/8" O.D. Tenon
MA1188-XX=4@90° Tenon Adapter for 2-3/8" O.D. Tenon
MA1189-XX=2@90° Tenon Adapter for 2-3/8" O.D. Tenon
MA1190-XX=3@90° Tenon Adapter for 2-3/8" O.D. Tenon
MA1191-XX=2@120° Tenon Adapter for 2-3/8" O.D. Tenon
MA1038-XX=Single Tenon Adapter for 3-1/2" O.D. Tenon
MA1039-XX=2@180° Tenon Adapter for 3-1/2" O.D. Tenon
MA1192-XX=3@120° Tenon Adapter for 3-1/2" O.D. Tenon
MA1193-XX=4@90° Tenon Adapter for 3-1/2" O.D. Tenon
MA1194-XX=2@90° Tenon Adapter for 3-1/2" O.D. Tenon
MA1195-XX=3@90° Tenon Adapter for 3-1/2" O.D. Tenon
FSIR-100=Wireless Configuration Tool for Occupancy Sensor [20]
GLEON-MT1=Field Installed Mesh Top for 1-4 Light Squares
GLEON-MT2=Field Installed Mesh Top for 5-6 Light Squares
GLEON-MT3=Field Installed Mesh Top for 7-8 Light Squares
GLEON-MT4=Field Installed Mesh Top for 9-10 Light Squares
GLEON-QM=Quick Mount Arm Kit
GLEON-QMEA=Quick Mount Extended Arm Kit
LS/HSS=Field Installed House Side Shield [28, 30]

NOTES:
1. Customer is responsible for engineering analysis to confirm pole and fixture compatibility for all applications. Refer to our white paper WP513001EN for additional support information.
2. DesignLights Consortium™ Qualified. Refer to www.designlights.org Qualified Products List under Family Models for details.
3. Standard 4000K CCT and minimum 70 CRI.
4. Not compatible with extended quick mount arm (QMEA).
5. Not compatible with standard quick mount arm (QM) or extended quick mount arm (QMEA).
6. Requires the use of an internal step down transformer when combined with sensor options. Not available with sensor at 1200mA. Not available in combination with the HA high ambient and sensor options at 1A.
7. Only for use with 480V Wye systems. Per NEC, not for use with ungrounded systems, impedance grounded systems or corner grounded systems (commonly known as Three Phase Three Wire Delta, Three Phase High Leg Delta and Three Phase Corner Grounded Delta systems).
8. May be required when two or more luminaires are oriented on a 90° or 120° drilling pattern. Refer to arm mounting requirement table.
9. Factory installed.
10. Maximum 8 light squares.
11. Maximum 6 light squares.
12. Extended lead times apply. Use dedicated IES files for 3000K, 5000K and 6000K when performing layouts. These files are published on the Galleon luminaire product page on the website.
13. Extended lead times apply. Use dedicated IES files for 3000K, 5000K and 6000K when performing layouts. These files are published on the Galleon luminaire product page on the website.
14. 1 Amp standard. Use dedicated IES files for 600mA, 800mA and 1200mA when performing layouts. These files are published on the Galleon luminaire product page on the website.
15. Not available with HA option.
16. 2L is not available with MS, MS/X or MS/DIM at 347V or 480V. 2L in AF-02 through AF-04 requires a larger housing, normally used for AF-05 or AF-06. Extended arm option may be required when mounting two or more fixtures per pole at 90° or 120°. Refer to arm mounting requirement table.
17. Not available with LumaWatt wireless sensors.
18. Requires the use of P photocontrol or the PER7 or R photocontrol receptacle with photocontrol accessory. See After Hours Dim supplemental guide for additional information.
19. 50°C lumen maintenance data applies to 600mA, 800mA and 1A drive currents.
20. The FSIR-100 configuration tool is required to adjust parameters including high and low modes, sensitivity, time delay, cutoff and more. Consult your lighting representative at Eaton for more information.
21. Approximately 22' detection diameter at 8' mounting height.
22. Approximately 40' detection diameter at 20' mounting height.
23. Approximately 60' detection diameter at 40' mounting height.
24. Approximately 100' detection diameter at 40' mounting height.
25. Replace X with number of Light Squares operating in low output mode.
26. LumaWatt wireless sensors are factory installed only requiring network components RF-EM-1, RF-GW-1 and RF-ROUT-1 in appropriate quantities. See www.eaton.com/lighting for LumaWatt application information.
27. Not available with house side shield (HSS).
28. Only for use with SL2, SL3, SL4 and AFL distributions. The Light Square trim plate is painted black when the HSS option is selected.
29. CE is not available with the LWR, MS, MS/X, MS/DIM, P, R or PER7 options. Available in 120-277V only.
30. One required for each Light Square.

McGraw-Edison

DESCRIPTION

The Galleon™ LED luminaire delivers exceptional performance in a highly scalable, low-profile design. Patented, high-efficiency AccuLED Optics™ system provides uniform and energy conscious illumination to walkways, parking lots, roadways, building areas and security lighting applications. IP66 rated and UL/cUL Listed for wet locations.

Catalog #		**Type**
Project		
Comments		**Date**
Prepared by		

SPECIFICATION FEATURES

Construction
Extruded aluminum driver enclosure thermally isolated from Light Squares for optimal thermal performance. Heavy-wall, die-cast aluminum end caps enclose housing and die-cast aluminum heat sinks. A unique, patent pending interlocking housing and heat sink provides scalability with superior structural rigidity. 3G vibration tested and rated. Optional tool-less hardware available for ease of entry into electrical chamber. Housing is IP66 rated.

Optics
Patented, high-efficiency injection-molded AccuLED Optics technology. Optics are precisely designed to shape the distribution maximizing efficiency and application spacing. AccuLED Optics create consistent distributions with the scalability to meet customized application requirements. Offered standard in 4000K (+/- 275K) CCT 70 CRI. Optional 3000K, 5000K and 6000K CCT.

Electrical
LED drivers are mounted to removable tray assembly for ease of maintenance. 120-277V 50/60Hz, 347V 60Hz or 480V 60Hz operation. 480V is compatible for use with 480V Wye systems only. Standard with 0-10V dimming. Shipped standard with Eaton proprietary circuit module designed to withstand 10kV of transient line surge. The Galleon LED luminaire is suitable for operation in -40°C to 40°C ambient environments. For applications with ambient temperatures exceeding 40°C, specify the HA (High Ambient) option. Light Squares are IP66 rated. Greater than 90% lumen maintenance expected at 60,000 hours. Available in standard 1A drive current and optional 600mA, 800mA and 1200mA drive currents (nominal).

Mounting
STANDARD ARM MOUNT: Extruded aluminum arm includes internal bolt guides allowing for easy positioning of fixture during mounting. When mounting two or more luminaires at 90° and 120° apart, the EA extended arm may be required. Refer to the arm mounting requirement table. Round pole adapter included. For wall mounting, specify wall mount bracket option. QUICK MOUNT ARM: Adapter is bolted directly to the pole. Quick mount arm slide into place on the adapter and is secured via two screws, facilitating quick and easy installation. The versatile, patent pending, quick mount arm accommodates multiple drill patterns ranging from 1-1/2" to 4-7/8". Removal of the door on the quick mount arm enables wiring of the fixture without having to access the driver compartment. A knock-out enables round pole mounting.

Finish
Housing finished in super durable TGIC polyester powder coat paint, 2.5 mil nominal thickness for superior protection against fade and wear. Heat sink is powder coated black. Standard housing colors include black, bronze, grey, white, dark platinum and graphite metallic. RAL and custom color matches available.

Warranty
Five-year warranty.

GLEON
GALLEON LED

1-10 Light Squares

Solid State LED

AREA/SITE LUMINAIRE

DIMENSIONS

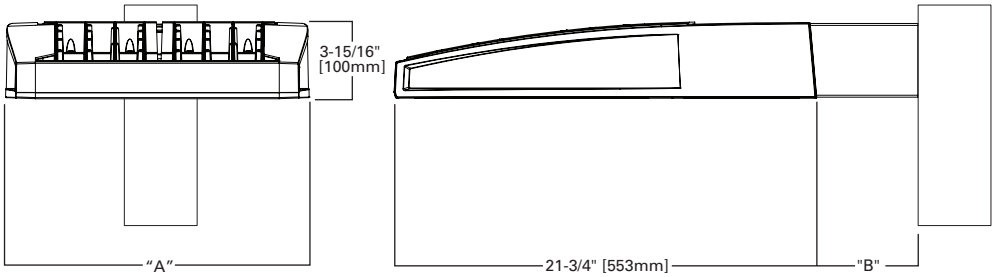

DIMENSION DATA

Number of Light Squares	"A" Width	"B" Standard Arm Length	"B" Optional Arm Length [1]	Weight with Arm (lbs.)	EPA with Arm [2] (Sq. Ft.)
1-4	15-1/2" (394mm)	7" (178mm)	10" (254mm)	33 (15.0 kgs.)	0.96
5-6	21-5/8" (549mm)	7" (178mm)	10" (254mm)	44 (20.0 kgs.)	1.00
7-8	27-5/8" (702mm)	7" (178mm)	13" (330mm)	54 (24.5 kgs.)	1.07
9-10	33-3/4" (857mm)	7" (178mm)	16" (406mm)	63 (28.6 kgs.)	1.12

NOTES: 1. Optional arm length to be used when mounting two fixtures at 90° on a single pole. **2.** EPA calculated with optional arm length.

DRILLING PATTERN

TYPE "N"

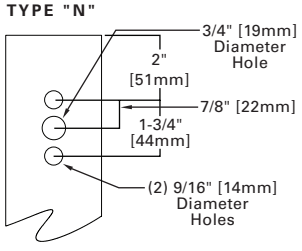

CERTIFICATION DATA
UL/cUL Wet Location Listed
ISO 9001
LM79 / LM80 Compliant
3G Vibration Rated
IP66 Rated
DesignLights Consortium™ Qualified*

ENERGY DATA
Electronic LED Driver
>0.9 Power Factor
<20% Total Harmonic Distortion
120V-277V 50/60Hz
347V & 480V 60Hz
-40°C Min. Temperature
40°C Max. Temperature
50°C Max. Temperature (HA Option)

*www.designlights.org

ARM MOUNTING REQUIREMENTS

Configuration	90° Apart	120° Apart
GLEON-AF-01	7" Arm (Standard)	7" Arm (Standard)
GLEON-AF-02	7" Arm (Standard)	7" Arm (Standard)
GLEON-AF-03	7" Arm (Standard)	7" Arm (Standard)
GLEON-AF-04	7" Arm (Standard)	7" Arm (Standard)
GLEON-AF-05	10" Extended Arm (Required)	7" Arm (Standard)
GLEON-AF-06	10" Extended Arm (Required)	7" Arm (Standard)
GLEON-AF-07	13" Extended Arm (Required)	13" Extended Arm (Required)
GLEON-AF-08	13" Extended Arm (Required)	13" Extended Arm (Required)
GLEON-AF-09	16" Extended Arm (Required)	16" Extended Arm (Required)
GLEON-AF-10	16" Extended Arm (Required)	16" Extended Arm (Required)

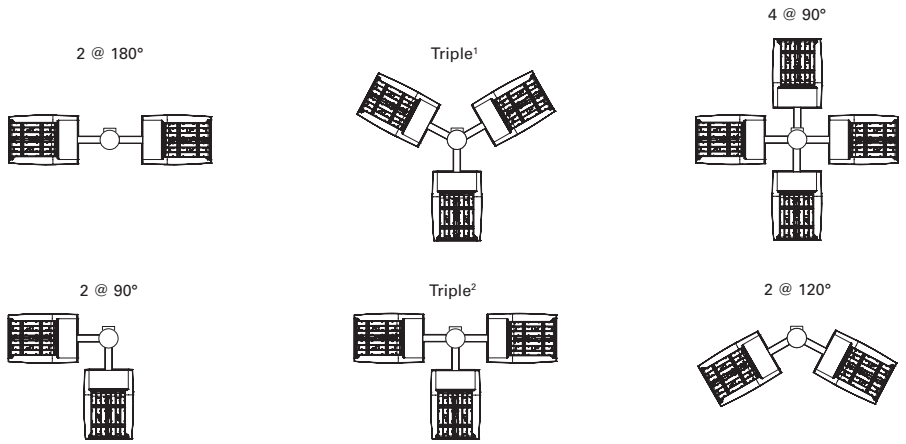

NOTES: 1 Round poles are 3 @ 120°. Square poles are 3 @ 90°. **2** Round poles are 3 @ 90°.

STANDARD WALL MOUNT

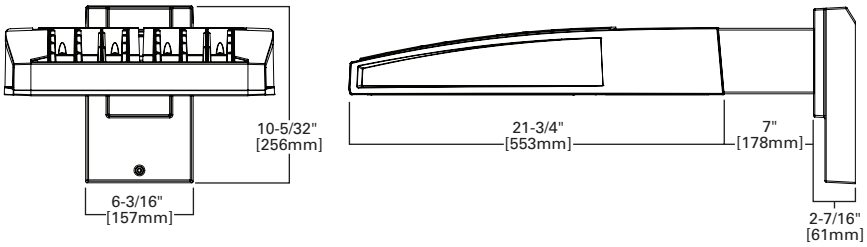

MAST ARM MOUNT

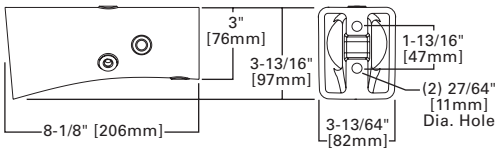

QUICK MOUNT ARM (INCLUDES FIXTURE ADAPTER)

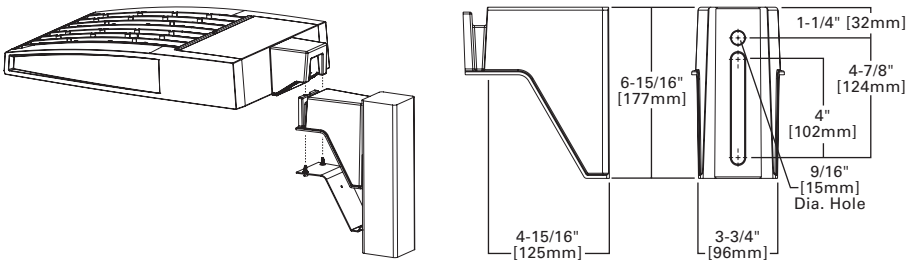

QM Quick Mount Arm (Standard)

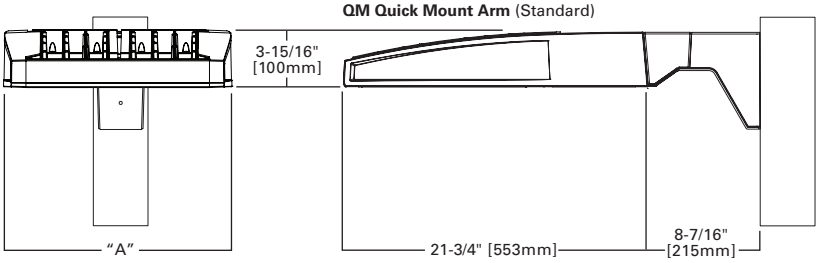

QMEA Quick Mount Arm (Extended)

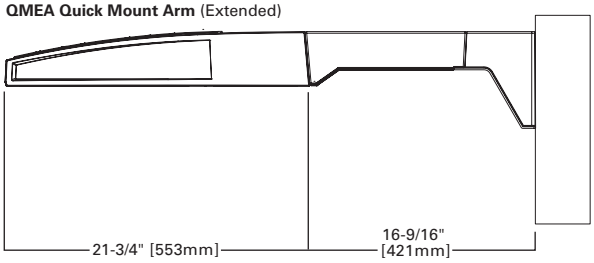

QUICK MOUNT ARM DATA

Number of Light Squares [1,2]	"A" Width	Weight with QM Arm (lbs.)	Weight with QMEA Arm (lbs.)	EPA (Sq. Ft.)
1-4	15-1/2" (394mm)	35 (15.91 kgs.)	38 (17.27 kgs.)	1.11
5-6 [3]	21-5/8" (549mm)	46 (20.91 kgs.)	49 (22.27 kgs.)	
7-8	27-5/8" (702mm)	56 (25.45 kgs.)	59 (26.82 kgs.)	

NOTES: 1 QM option available with 1-8 light square configurations. **2** QMEA option available with 1-6 light square configurations. **3** QMEA arm to be used when mounting two fixtures at 90° on a single pole.

Powering Business Worldwide

Eaton
1121 Highway 74 South
Peachtree City, GA 30269
P: 770-486-4800
www.eaton.com/lighting

Specifications and dimensions subject to change without notice.

OPTIC ORIENTATION

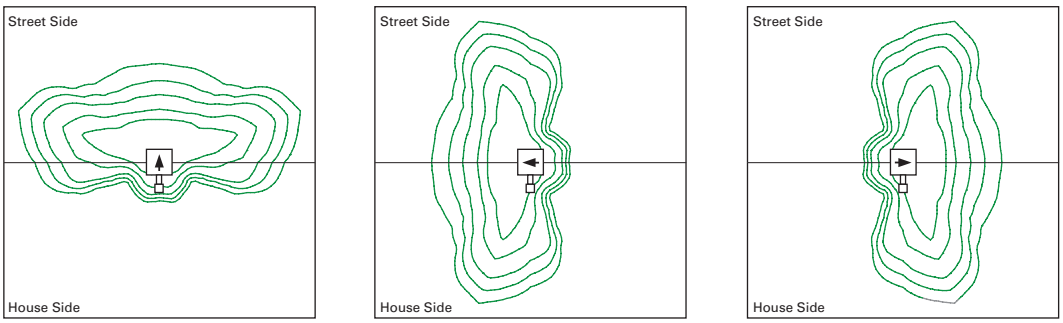

Standard | **Optics Rotated Left @ 90°** [L90] | **Optics Rotated Right @ 90°** [R90]

OPTICAL DISTRIBUTIONS

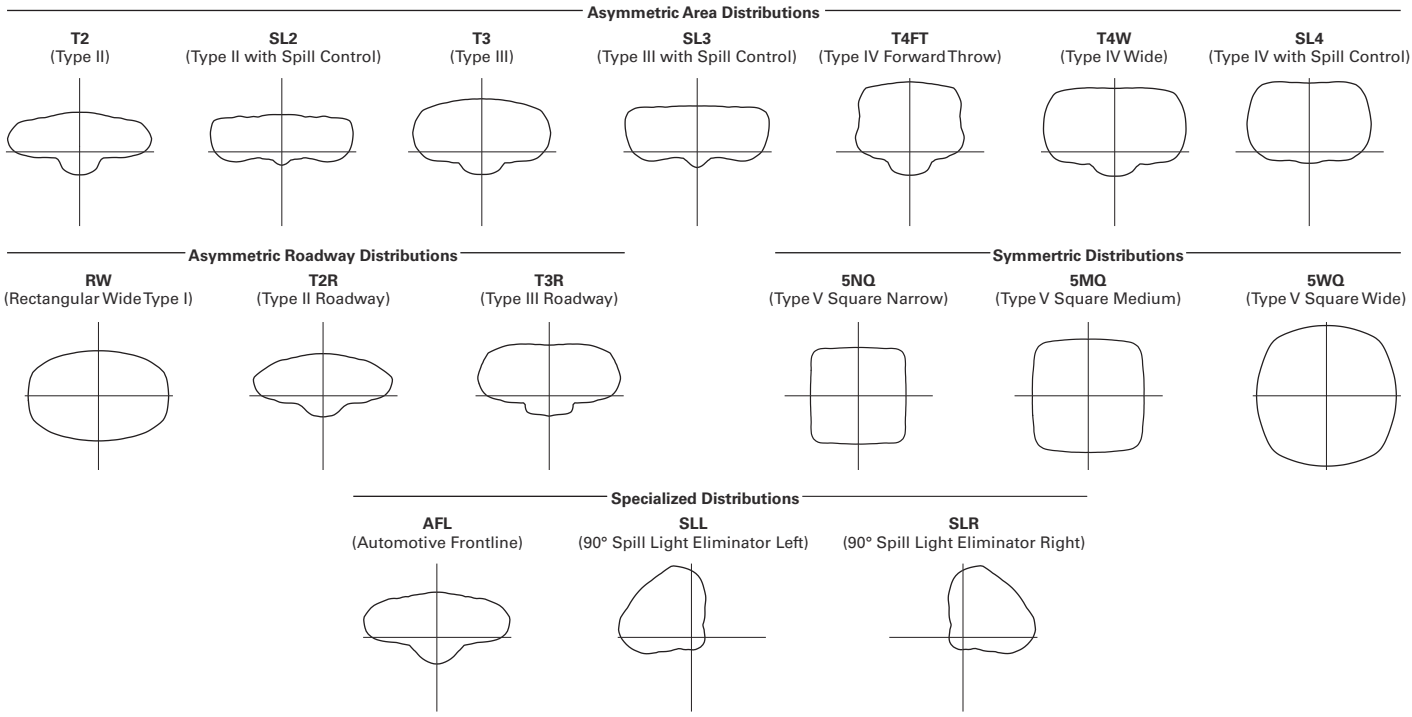

LUMEN MAINTENANCE

Drive Current	Ambient Temperature	TM-21 Lumen Maintenance (60,000 Hours)	Projected L70 (Hours)
Up to 1A	Up to 50°C	> 95%	416,000
1.2A	Up to 40°C	> 90%	205,000

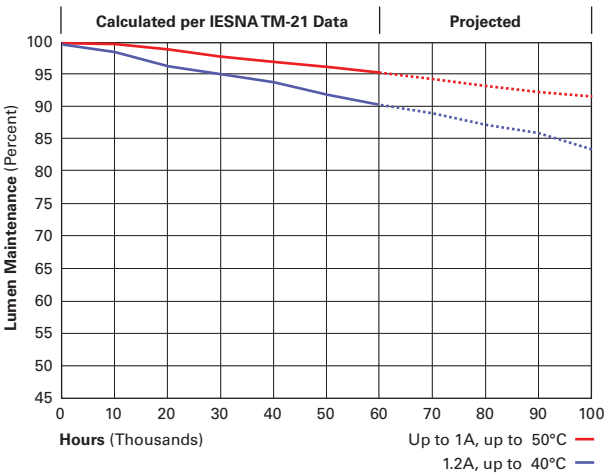

LUMEN MULTIPLIER

Ambient Temperature	Lumen Multiplier
0°C	1.02
10°C	1.01
25°C	1.00
40°C	0.99
50°C	0.97

Powering Business Worldwide

Eaton
1121 Highway 74 South
Peachtree City, GA 30269
P: 770-486-4800
www.eaton.com/lighting

Specifications and dimensions subject to change without notice.

NOMINAL POWER LUMENS (1.2A)

Number of Light Squares		1	2	3	4	5	6	7	8	9	10
Nominal Power (Watts)		67	129	191	258	320	382	448	511	575	640
Input Current @ 120V (A)		0.58	1.16	1.78	2.31	2.94	3.56	4.09	4.71	5.34	5.87
Input Current @ 208V (A)		0.33	0.63	0.93	1.27	1.57	1.87	2.22	2.52	2.8	3.14
Input Current @ 240V (A)		0.29	0.55	0.80	1.10	1.35	1.61	1.93	2.18	2.41	2.71
Input Current @ 277V (A)		0.25	0.48	0.70	0.96	1.18	1.39	1.69	1.90	2.09	2.36
Input Current @ 347V (A)		0.20	0.39	0.57	0.78	0.96	1.15	1.36	1.54	1.72	1.92
Input Current @ 480V (A)		0.15	0.30	0.43	0.60	0.73	0.85	1.03	1.16	1.28	1.45
Optics											
T2	4000K/5000K Lumens	6,709	13,111	19,562	25,848	32,026	38,325	45,324	51,355	57,286	63,424
	3000K Lumens	5,939	11,606	17,316	22,881	28,349	33,925	40,121	45,459	50,710	56,143
	BUG Rating	B1-U0-G2	B2-U0-G2	B3-U0-G3	B3-U0-G4	B3-U0-G4	B3-U0-G5	B4-U0-G5	B4-U0-G5	B4-U0-G5	B4-U0-G5
T2R	4000K/5000K Lumens	7,122	13,919	20,769	27,442	34,000	40,687	48,117	54,519	60,816	67,333
	3000K Lumens	5,939	11,606	17,316	22,881	28,349	33,925	40,121	45,459	50,710	56,143
	BUG Rating	B1-U0-G1	B2-U0-G2	B2-U0-G3	B3-U0-G3	B3-U0-G4	B3-U0-G4	B3-U0-G5	B3-U0-G5	B4-U0-G5	B4-U0-G5
T3	4000K/5000K Lumens	6,838	13,363	19,939	26,346	32,642	39,062	46,196	52,343	58,388	64,646
	3000K Lumens	6,053	11,829	17,650	23,321	28,895	34,578	40,893	46,334	51,685	57,225
	BUG Rating	B1-U0-G2	B2-U0-G2	B3-U0-G3	B3-U0-G4	B3-U0-G4	B3-U0-G5	B4-U0-G5	B4-U0-G5	B4-U0-G5	B4-U0-G5
T3R	4000K/5000K Lumens	6,990	13,660	20,382	26,931	33,368	39,930	47,223	53,506	59,686	66,081
	3000K Lumens	6,188	12,092	18,042	23,839	29,537	35,346	41,802	47,364	52,834	58,495
	BUG Rating	B1-U0-G2	B2-U0-G3	B2-U0-G3	B3-U0-G4	B3-U0-G5	B3-U0-G5	B3-U0-G5	B3-U0-G5	B4-U0-G5	B4-U0-G5
T4FT	4000K/5000K Lumens	6,878	13,440	20,055	26,499	32,832	39,289	46,464	52,646	58,726	65,020
	3000K Lumens	6,088	11,897	17,753	23,457	29,063	34,779	41,130	46,602	51,984	57,556
	BUG Rating	B1-U0-G2	B2-U0-G3	B2-U0-G4	B3-U0-G4	B3-U0-G5	B3-U0-G5	B3-U0-G5	B4-U0-G5	B4-U0-G5	B4-U0-G5
T4W	4000K/5000K Lumens	6,789	13,267	19,795	26,156	32,408	38,781	45,864	51,967	57,968	64,180
	3000K Lumens	6,010	11,744	17,523	23,153	28,688	34,329	40,599	46,001	51,313	56,812
	BUG Rating	B1-U0-G2	B2-U0-G3	B3-U0-G4	B3-U0-G4	B3-U0-G5	B3-U0-G5	B4-U0-G5	B4-U0-G5	B4-U0-G5	B4-U0-G5
SL2	4000K/5000K Lumens	6,697	13,088	19,529	25,804	31,970	38,259	45,245	51,267	57,186	63,315
	3000K Lumens	5,928	11,585	17,287	22,842	28,300	33,867	40,051	45,382	50,621	56,046
	BUG Rating	B1-U0-G2	B2-U0-G3	B3-U0-G3	B3-U0-G4	B3-U0-G4	B3-U0-G5	B4-U0-G5	B4-U0-G5	B4-U0-G5	B4-U0-G5
SL3	4000K/5000K Lumens	6,837	13,361	19,936	26,342	32,639	39,057	46,189	52,336	58,380	64,636
	3000K Lumens	6,052	11,827	17,647	23,318	28,892	34,573	40,887	46,328	51,678	57,216
	BUG Rating	B1-U0-G2	B2-U0-G3	B2-U0-G4	B3-U0-G4	B3-U0-G5	B3-U0-G5	B3-U0-G5	B4-U0-G5	B4-U0-G5	B4-U0-G5
SL4	4000K/5000K Lumens	6,496	12,695	18,943	25,029	31,011	37,110	43,886	49,727	55,470	61,414
	3000K Lumens	5,750	11,238	16,768	22,156	27,451	32,850	38,848	44,018	49,102	54,364
	BUG Rating	B1-U0-G2	B1-U0-G3	B2-U0-G4	B2-U0-G4	B2-U0-G5	B3-U0-G5	B3-U0-G5	B3-U0-G5	B3-U0-G5	B3-U0-G5
5NQ	4000K/5000K Lumens	7,052	13,781	20,564	27,171	33,664	40,285	47,641	53,981	60,215	66,669
	3000K Lumens	6,242	12,199	18,203	24,052	29,799	35,660	42,172	47,784	53,302	59,015
	BUG Rating	B3-U0-G1	B3-U0-G2	B4-U0-G2	B4-U0-G2	B5-U0-G2	B5-U0-G3	B5-U0-G3	B5-U0-G4	B5-U0-G4	B5-U0-G4
5MQ	4000K/5000K Lumens	7,182	14,034	20,942	27,671	34,284	41,027	48,518	54,975	61,323	67,896
	3000K Lumens	6,358	12,423	18,538	24,494	30,348	36,317	42,948	48,664	54,283	60,102
	BUG Rating	B3-U0-G1	B4-U0-G2	B4-U0-G2	B5-U0-G3	B5-U0-G4	B5-U0-G4	B5-U0-G4	B5-U0-G5	B5-U0-G5	B5-U0-G5
5WQ	4000K/5000K Lumens	7,201	14,073	20,998	27,744	34,375	41,136	48,648	55,121	61,487	68,077
	3000K Lumens	6,374	12,457	18,587	24,559	30,429	36,414	43,063	48,793	54,428	60,262
	BUG Rating	B3-U0-G2	B4-U0-G2	B5-U0-G3	B5-U0-G4	B5-U0-G4	B5-U0-G4	B5-U0-G5	B5-U0-G5	B5-U0-G5	B5-U0-G5
SLL/SLR	4000K/5000K Lumens	6,009	11,741	17,519	23,148	28,681	34,321	40,589	45,990	51,301	56,798
	3000K Lumens	5,319	10,393	15,508	20,491	25,388	30,381	35,929	40,710	45,412	50,278
	BUG Rating	B1-U0-G2	B2-U0-G3	B2-U0-G3	B3-U0-G4	B3-U0-G4	B3-U0-G5	B3-U0-G5	B3-U0-G5	B3-U0-G5	B4-U0-G5
RW	4000K/5000K Lumens	6,989	13,657	20,378	26,925	33,360	39,921	47,211	53,494	59,672	66,066
	3000K Lumens	6,187	12,089	18,039	23,834	29,530	35,338	41,791	47,353	52,822	58,482
	BUG Rating	B3-U0-G1	B3-U0-G2	B4-U0-G2	B4-U0-G2	B5-U0-G3	B5-U0-G3	B5-U0-G4	B5-U0-G4	B5-U0-G4	B5-U0-G4
AFL	4000K/5000K Lumens	7,014	13,706	20,452	27,023	33,481	40,066	47,383	53,688	59,888	66,306
	3000K Lumens	6,209	12,133	18,104	23,921	29,637	35,466	41,943	47,525	53,013	58,694
	BUG Rating	B1-U0-G1	B2-U0-G2	B2-U0-G2	B3-U0-G3	B3-U0-G3	B3-U0-G3	B3-U0-G3	B3-U0-G4	B4-U0-G4	B4-U0-G4

* Nominal data for 70 CRI.

NOMINAL POWER LUMENS (1A)

Number of Light Squares		1	2	3	4	5	6	7	8	9	10
Nominal Power (Watts)		59	113	166	225	279	333	391	445	501	558
Input Current @ 120V (A)		0.51	1.02	1.53	2.03	2.55	3.06	3.56	4.08	4.6	5.07
Input Current @ 208V (A)		0.29	0.56	0.82	1.11	1.37	1.64	1.93	2.19	2.46	2.75
Input Current @ 240V (A)		0.26	0.48	0.71	0.96	1.19	1.41	1.67	1.89	2.12	2.39
Input Current @ 277V (A)		0.23	0.42	0.61	0.83	1.03	1.23	1.45	1.65	1.84	2.09
Input Current @ 347V (A)		0.17	0.32	0.50	0.64	0.82	1.00	1.14	1.32	1.50	1.68
Input Current @ 480V (A)		0.14	0.24	0.37	0.48	0.61	0.75	0.91	0.99	1.12	1.28
Optics											
T2	4000K/5000K Lumens	6,116	11,951	17,833	23,563	29,195	34,937	41,317	46,814	52,221	57,817
	3000K Lumens	5,414	10,579	15,786	20,858	25,843	30,926	36,574	41,440	46,226	51,180
	BUG Rating	B1-U0-G2	B2-U0-G2	B3-U0-G3	B3-U0-G3	B3-U0-G4	B3-U0-G4	B4-U0-G5	B4-U0-G5	B4-U0-G5	B4-U0-G5
T2R	4000K/5000K Lumens	6,493	12,688	18,932	25,015	30,994	37,090	43,863	49,699	55,439	61,380
	3000K Lumens	5,748	11,231	16,759	22,143	27,436	32,832	38,828	43,994	49,075	54,334
	BUG Rating	B1-U0-G1	B2-U0-G2	B2-U0-G2	B3-U0-G3	B3-U0-G4	B3-U0-G4	B3-U0-G4	B3-U0-G5	B4-U0-G5	B4-U0-G5
T3	4000K/5000K Lumens	6,234	12,181	18,176	24,017	29,756	35,609	42,111	47,715	53,225	58,930
	3000K Lumens	5,518	10,783	16,089	21,260	26,340	31,521	37,277	42,237	47,115	52,165
	BUG Rating	B1-U0-G2	B2-U0-G2	B3-U0-G3	B3-U0-G4	B3-U0-G4	B3-U0-G5	B4-U0-G5	B4-U0-G5	B4-U0-G5	B4-U0-G5
T3R	4000K/5000K Lumens	6,372	12,453	18,580	24,550	30,418	36,400	43,048	48,776	54,409	60,239
	3000K Lumens	5,640	11,023	16,447	21,732	26,926	32,221	38,106	43,177	48,163	53,324
	BUG Rating	B1-U0-G2	B2-U0-G2	B2-U0-G3	B3-U0-G4	B3-U0-G4	B3-U0-G5	B3-U0-G5	B3-U0-G5	B3-U0-G5	B4-U0-G5
T4FT	4000K/5000K Lumens	6,270	12,252	18,282	24,156	29,929	35,815	42,356	47,992	53,534	59,271
	3000K Lumens	5,550	10,845	16,183	21,383	26,493	31,703	37,494	42,483	47,388	52,467
	BUG Rating	B1-U0-G2	B2-U0-G2	B2-U0-G3	B3-U0-G4	B3-U0-G5	B3-U0-G5	B3-U0-G5	B3-U0-G5	B4-U0-G5	B4-U0-G5
T4W	4000K/5000K Lumens	6,189	12,094	18,045	23,844	29,543	35,352	41,809	47,372	52,843	58,506
	3000K Lumens	5,479	10,706	15,973	21,107	26,151	31,294	37,009	41,934	46,777	51,790
	BUG Rating	B1-U0-G2	B2-U0-G2	B3-U0-G3	B3-U0-G4	B3-U0-G5	B3-U0-G5	B4-U0-G5	B4-U0-G5	B4-U0-G5	B4-U0-G5
SL2	4000K/5000K Lumens	6,105	11,931	17,803	23,522	29,144	34,877	41,245	46,734	52,130	57,717
	3000K Lumens	5,404	10,561	15,759	20,822	25,798	30,873	36,510	41,369	46,145	51,091
	BUG Rating	B1-U0-G2	B2-U0-G3	B3-U0-G3	B3-U0-G4	B3-U0-G4	B3-U0-G5	B4-U0-G5	B4-U0-G5	B4-U0-G5	B4-U0-G5
SL3	4000K/5000K Lumens	6,233	12,180	18,174	24,013	29,753	35,604	42,106	47,708	53,218	58,921
	3000K Lumens	5,517	10,782	16,088	21,256	26,337	31,517	37,272	42,231	47,109	52,157
	BUG Rating	B1-U0-G2	B2-U0-G3	B2-U0-G3	B3-U0-G4	B3-U0-G4	B3-U0-G5	B3-U0-G5	B3-U0-G5	B4-U0-G5	B4-U0-G5
SL4	4000K/5000K Lumens	5,922	11,572	17,268	22,816	28,269	33,829	40,006	45,330	50,566	55,984
	3000K Lumens	5,242	10,244	15,286	20,197	25,024	29,945	35,413	40,126	44,761	49,557
	BUG Rating	B1-U0-G2	B1-U0-G3	B2-U0-G3	B2-U0-G4	B2-U0-G5	B3-U0-G5	B3-U0-G5	B3-U0-G5	B3-U0-G5	B3-U0-G5
5NQ	4000K/5000K Lumens	6,429	12,563	18,746	24,768	30,688	36,723	43,429	49,208	54,891	60,775
	3000K Lumens	5,691	11,121	16,594	21,925	27,165	32,507	38,443	43,559	48,590	53,798
	BUG Rating	B2-U0-G1	B3-U0-G2	B4-U0-G2	B4-U0-G2	B5-U0-G2	B5-U0-G3	B5-U0-G3	B5-U0-G3	B5-U0-G4	B5-U0-G4
5MQ	4000K/5000K Lumens	6,547	12,794	19,090	25,224	31,253	37,400	44,228	50,114	55,902	61,893
	3000K Lumens	5,795	11,325	16,898	22,328	27,665	33,106	39,151	44,361	49,484	54,788
	BUG Rating	B3-U0-G1	B4-U0-G2	B4-U0-G2	B5-U0-G3	B5-U0-G3	B5-U0-G4	B5-U0-G4	B5-U0-G4	B5-U0-G5	B5-U0-G5
5WQ	4000K/5000K Lumens	6,564	12,828	19,141	25,291	31,336	37,499	44,347	50,248	56,051	62,058
	3000K Lumens	5,810	11,355	16,944	22,388	27,739	33,194	39,256	44,480	49,616	54,934
	BUG Rating	B3-U0-G2	B4-U0-G2	B5-U0-G3	B5-U0-G3	B5-U0-G4	B5-U0-G4	B5-U0-G5	B5-U0-G5	B5-U0-G5	B5-U0-G5
SLL/SLR	4000K/5000K Lumens	5,478	10,703	15,970	21,102	26,145	31,286	37,001	41,924	46,765	51,777
	3000K Lumens	4,849	9,474	14,137	18,679	23,144	27,694	32,753	37,111	41,396	45,833
	BUG Rating	B1-U0-G2	B1-U0-G3	B2-U0-G3	B2-U0-G4	B3-U0-G4	B3-U0-G5	B3-U0-G5	B3-U0-G5	B3-U0-G5	B3-U0-G5
RW	4000K/5000K Lumens	6,371	12,449	18,576	24,544	30,411	36,392	43,037	48,764	54,396	60,225
	3000K Lumens	5,640	11,020	16,443	21,726	26,920	32,214	38,096	43,166	48,151	53,311
	BUG Rating	B3-U0-G1	B3-U0-G2	B4-U0-G2	B4-U0-G2	B5-U0-G3	B5-U0-G3	B5-U0-G3	B5-U0-G4	B5-U0-G4	B5-U0-G4
AFL	4000K/5000K Lumens	6,394	12,494	18,644	24,634	30,521	36,524	43,194	48,942	54,593	60,444
	3000K Lumens	5,660	11,060	16,504	21,806	27,017	32,331	38,235	43,323	48,326	53,505
	BUG Rating	B1-U0-G1	B2-U0-G2	B2-U0-G2	B3-U0-G2	B3-U0-G3	B3-U0-G3	B3-U0-G3	B3-U0-G3	B4-U0-G4	B4-U0-G4

* Nominal data for 70 CRI.

NOMINAL POWER LUMENS (800MA)

Number of Light Squares		1	2	3	4	5	6	7	8	9	10
Nominal Power (Watts)		44	85	124	171	210	249	295	334	374	419
Input Current @ 120V (A)		0.39	0.77	1.13	1.54	1.90	2.26	2.67	3.03	3.39	3.80
Input Current @ 208V (A)		0.22	0.44	0.62	0.88	1.06	1.24	1.50	1.68	1.87	2.12
Input Current @ 240V (A)		0.19	0.38	0.54	0.76	0.92	1.08	1.30	1.46	1.62	1.84
Input Current @ 277V (A)		0.17	0.36	0.47	0.72	0.83	0.95	1.19	1.31	1.42	1.67
Input Current @ 347V (A)		0.15	0.24	0.38	0.49	0.63	0.77	0.87	1.01	1.15	1.52
Input Current @ 480V (A)		0.11	0.18	0.29	0.37	0.48	0.59	0.66	0.77	0.88	0.96
Optics											
T2	4000K/5000K Lumens	4,941	9,656	14,408	19,038	23,588	28,227	33,382	37,823	42,191	46,713
	3000K Lumens	4,374	8,547	12,754	16,852	20,880	24,987	29,550	33,481	37,347	41,350
	BUG Rating	B1-U0-G1	B2-U0-G2	B2-U0-G2	B3-U0-G3	B3-U0-G3	B3-U0-G4	B3-U0-G4	B3-U0-G4	B4-U0-G5	B4-U0-G5
T2R	4000K/5000K Lumens	5,246	10,251	15,296	20,211	25,041	29,966	35,439	40,154	44,791	49,592
	3000K Lumens	4,644	9,074	13,540	17,891	22,166	26,526	31,371	35,544	39,649	43,899
	BUG Rating	B1-U0-G1	B1-U0-G2	B2-U0-G2	B2-U0-G3	B3-U0-G3	B3-U0-G4	B3-U0-G4	B3-U0-G4	B3-U0-G4	B3-U0-G5
T3	4000K/5000K Lumens	5,037	9,842	14,685	19,404	24,041	28,770	34,024	38,551	43,003	47,612
	3000K Lumens	4,459	8,712	12,999	17,176	21,281	25,467	30,118	34,125	38,066	42,146
	BUG Rating	B1-U0-G1	B2-U0-G2	B2-U0-G3	B3-U0-G3	B3-U0-G4	B3-U0-G4	B3-U0-G4	B3-U0-G5	B4-U0-G5	B4-U0-G5
T3R	4000K/5000K Lumens	5,148	10,061	15,011	19,835	24,576	29,409	34,780	39,408	43,959	48,669
	3000K Lumens	4,557	8,906	13,288	17,558	21,755	26,033	30,787	34,884	38,913	43,082
	BUG Rating	B1-U0-G2	B1-U0-G2	B2-U0-G3	B2-U0-G3	B3-U0-G4	B3-U0-G4	B3-U0-G5	B3-U0-G5	B3-U0-G5	B3-U0-G5
T4FT	4000K/5000K Lumens	5,066	9,899	14,770	19,516	24,181	28,936	34,221	38,774	43,252	47,888
	3000K Lumens	4,484	8,763	13,074	17,276	21,405	25,614	30,292	34,323	38,287	42,390
	BUG Rating	B1-U0-G2	B1-U0-G2	B2-U0-G3	B2-U0-G4	B3-U0-G4	B3-U0-G4	B3-U0-G5	B3-U0-G5	B3-U0-G5	B3-U0-G5
T4W	4000K/5000K Lumens	5,000	9,771	14,579	19,264	23,869	28,562	33,779	38,274	42,694	47,269
	3000K Lumens	4,426	8,649	12,905	17,052	21,129	25,283	29,901	33,880	37,793	41,843
	BUG Rating	B1-U0-G2	B2-U0-G2	B2-U0-G3	B3-U0-G4	B3-U0-G4	B3-U0-G4	B3-U0-G5	B3-U0-G5	B4-U0-G5	B4-U0-G5
SL2	4000K/5000K Lumens	4,933	9,639	14,383	19,005	23,547	28,178	33,324	37,758	42,118	46,632
	3000K Lumens	4,367	8,532	12,732	16,823	20,844	24,943	29,498	33,423	37,283	41,279
	BUG Rating	B1-U0-G2	B2-U0-G2	B2-U0-G3	B3-U0-G3	B3-U0-G4	B3-U0-G4	B3-U0-G4	B3-U0-G5	B4-U0-G5	B4-U0-G5
SL3	4000K/5000K Lumens	5,036	9,841	14,683	19,401	24,039	28,766	34,019	38,546	42,997	47,605
	3000K Lumens	4,458	8,711	12,997	17,174	21,279	25,464	30,114	34,121	38,061	42,140
	BUG Rating	B1-U0-G2	B1-U0-G2	B2-U0-G3	B2-U0-G3	B3-U0-G4	B3-U0-G4	B3-U0-G5	B3-U0-G5	B3-U0-G5	B3-U0-G5
SL4	4000K/5000K Lumens	4,784	9,350	13,951	18,434	22,840	27,332	32,323	36,624	40,854	45,232
	3000K Lumens	4,235	8,277	12,349	16,318	20,218	24,194	28,612	32,420	36,164	40,039
	BUG Rating	B1-U0-G2	B1-U0-G3	B1-U0-G3	B2-U0-G4	B2-U0-G4	B2-U0-G5	B2-U0-G5	B3-U0-G5	B3-U0-G5	B3-U0-G5
5NQ	4000K/5000K Lumens	5,194	10,150	15,145	20,011	24,794	29,670	35,088	39,757	44,349	49,102
	3000K Lumens	4,598	8,985	13,406	17,714	21,948	26,264	31,060	35,193	39,258	43,465
	BUG Rating	B2-U0-G1	B3-U0-G1	B3-U0-G2	B4-U0-G2	B4-U0-G2	B5-U0-G2	B5-U0-G3	B5-U0-G3	B5-U0-G3	B5-U0-G3
5MQ	4000K/5000K Lumens	5,290	10,337	15,424	20,380	25,250	30,217	35,734	40,489	45,165	50,006
	3000K Lumens	4,683	9,150	13,653	18,040	22,351	26,748	31,632	35,841	39,980	44,265
	BUG Rating	B3-U0-G1	B3-U0-G2	B4-U0-G2	B4-U0-G2	B5-U0-G3	B5-U0-G3	B5-U0-G4	B5-U0-G4	B5-U0-G4	B5-U0-G4
5WQ	4000K/5000K Lumens	5,304	10,365	15,465	20,434	25,318	30,297	35,830	40,597	45,286	50,139
	3000K Lumens	4,695	9,175	13,690	18,088	22,411	26,819	31,717	35,936	40,087	44,383
	BUG Rating	B3-U0-G1	B4-U0-G2	B4-U0-G2	B5-U0-G3	B5-U0-G3	B5-U0-G4	B5-U0-G4	B5-U0-G4	B5-U0-G5	B5-U0-G5
SLL/SLR	4000K/5000K Lumens	4,426	8,648	12,903	17,049	21,124	25,278	29,894	33,872	37,784	41,832
	3000K Lumens	3,918	7,655	11,422	15,092	18,699	22,376	26,462	29,983	33,446	37,030
	BUG Rating	B1-U0-G2	B1-U0-G2	B2-U0-G3	B2-U0-G3	B2-U0-G4	B3-U0-G4	B3-U0-G5	B3-U0-G5	B3-U0-G5	B3-U0-G5
RW	4000K/5000K Lumens	5,147	10,058	15,009	19,830	24,570	29,402	34,771	39,399	43,949	48,658
	3000K Lumens	4,556	8,903	13,286	17,554	21,749	26,027	30,779	34,876	38,904	43,072
	BUG Rating	B2-U0-G1	B3-U0-G1	B3-U0-G2	B4-U0-G2	B4-U0-G2	B4-U0-G2	B5-U0-G3	B5-U0-G3	B5-U0-G3	B5-U0-G4
AFL	4000K/5000K Lumens	5,166	10,095	15,063	19,903	24,659	29,509	34,898	39,542	44,108	48,835
	3000K Lumens	4,573	8,936	13,334	17,618	21,828	26,121	30,892	35,003	39,044	43,229
	BUG Rating	B1-U0-G1	B1-U0-G1	B2-U0-G2	B2-U0-G2	B3-U0-G2	B3-U0-G3	B3-U0-G3	B3-U0-G3	B3-U0-G3	B3-U0-G3

* Nominal data for 70 CRI.

NOMINAL POWER LUMENS (600MA)

Number of Light Squares		1	2	3	4	5	6	7	8	9	10
Nominal Power (Watts)		34	66	96	129	162	193	226	257	290	323
Input Current @ 120V (A)		0.30	0.58	0.86	1.16	1.44	1.73	2.03	2.33	2.59	2.89
Input Current @ 208V (A)		0.17	0.34	0.49	0.65	0.84	0.99	1.14	1.30	1.48	1.63
Input Current @ 240V (A)		0.15	0.30	0.43	0.56	0.74	0.87	1.00	1.13	1.30	1.43
Input Current @ 277V (A)		0.14	0.28	0.41	0.52	0.69	0.81	0.93	1.04	1.22	1.33
Input Current @ 347V (A)		0.11	0.19	0.30	0.39	0.49	0.60	0.69	0.77	0.90	0.99
Input Current @ 480V (A)		0.08	0.15	0.24	0.30	0.38	0.48	0.53	0.59	0.71	0.77
Optics											
T2	4000K/5000K Lumens	4,029	7,874	11,749	15,525	19,235	23,019	27,222	30,844	34,406	38,093
	3000K Lumens	3,566	6,970	10,400	13,743	17,027	20,376	24,097	27,303	30,456	33,720
	BUG Rating	B1-U0-G1	B1-U0-G2	B2-U0-G2	B2-U0-G2	B3-U0-G3	B3-U0-G3	B3-U0-G4	B3-U0-G4	B3-U0-G4	B3-U0-G4
T2R	4000K/5000K Lumens	4,278	8,360	12,474	16,482	20,421	24,437	28,900	32,745	36,527	40,441
	3000K Lumens	3,787	7,400	11,042	14,590	18,077	21,632	25,582	28,986	32,334	35,798
	BUG Rating	B1-U0-G1	B1-U0-G2	B2-U0-G2	B2-U0-G2	B2-U0-G3	B3-U0-G3	B3-U0-G3	B3-U0-G4	B3-U0-G4	B3-U0-G4
T3	4000K/5000K Lumens	4,107	8,026	11,976	15,824	19,605	23,461	27,746	31,438	35,068	38,827
	3000K Lumens	3,636	7,105	10,601	14,007	17,354	20,768	24,561	27,829	31,042	34,370
	BUG Rating	B1-U0-G1	B1-U0-G2	B2-U0-G2	B2-U0-G3	B3-U0-G3	B3-U0-G4	B3-U0-G4	B3-U0-G4	B3-U0-G5	B3-U0-G5
T3R	4000K/5000K Lumens	4,198	8,205	12,242	16,175	20,041	23,982	28,363	32,137	35,848	39,689
	3000K Lumens	3,716	7,263	10,837	14,318	17,740	21,229	25,107	28,448	31,733	35,133
	BUG Rating	B1-U0-G1	B1-U0-G2	B2-U0-G2	B2-U0-G3	B2-U0-G3	B3-U0-G4	B3-U0-G4	B3-U0-G4	B3-U0-G5	B3-U0-G5
T4FT	4000K/5000K Lumens	4,131	8,072	12,045	15,915	19,719	23,597	27,907	31,620	35,272	39,052
	3000K Lumens	3,657	7,145	10,662	14,088	17,455	20,888	24,703	27,990	31,223	34,569
	BUG Rating	B1-U0-G1	B1-U0-G2	B2-U0-G2	B2-U0-G3	B2-U0-G4	B3-U0-G4	B3-U0-G4	B3-U0-G5	B3-U0-G5	B3-U0-G5
T4W	4000K/5000K Lumens	4,077	7,968	11,889	15,710	19,465	23,292	27,546	31,212	34,816	38,547
	3000K Lumens	3,609	7,053	10,524	13,906	17,230	20,618	24,384	27,629	30,819	34,122
	BUG Rating	B1-U0-G1	B1-U0-G2	B2-U0-G2	B2-U0-G3	B3-U0-G4	B3-U0-G4	B3-U0-G4	B3-U0-G5	B3-U0-G5	B3-U0-G5
SL2	4000K/5000K Lumens	4,022	7,861	11,729	15,498	19,202	22,979	27,175	30,791	34,347	38,028
	3000K Lumens	3,560	6,959	10,383	13,719	16,998	20,341	24,055	27,256	30,404	33,662
	BUG Rating	B1-U0-G1	B1-U0-G2	B2-U0-G3	B2-U0-G3	B3-U0-G3	B3-U0-G4	B3-U0-G4	B3-U0-G4	B3-U0-G5	B3-U0-G5
SL3	4000K/5000K Lumens	4,106	8,025	11,974	15,821	19,603	23,458	27,742	31,433	35,064	38,821
	3000K Lumens	3,635	7,104	10,599	14,005	17,353	20,765	24,557	27,824	31,039	34,364
	BUG Rating	B1-U0-G1	B1-U0-G2	B2-U0-G3	B2-U0-G3	B2-U0-G3	B3-U0-G4	B3-U0-G4	B3-U0-G4	B3-U0-G5	B3-U0-G5
SL4	4000K/5000K Lumens	3,902	7,624	11,377	15,033	18,626	22,289	26,359	29,867	33,316	36,886
	3000K Lumens	3,454	6,749	10,071	13,307	16,488	19,730	23,333	26,438	29,491	32,651
	BUG Rating	B1-U0-G2	B1-U0-G2	B1-U0-G3	B1-U0-G3	B2-U0-G4	B2-U0-G4	B2-U0-G4	B2-U0-G5	B3-U0-G5	B3-U0-G5
5NQ	4000K/5000K Lumens	4,236	8,277	12,351	16,319	20,219	24,196	28,614	32,422	36,166	40,042
	3000K Lumens	3,750	7,327	10,933	14,446	17,898	21,418	25,329	28,700	32,014	35,445
	BUG Rating	B2-U0-G1	B3-U0-G1	B3-U0-G2	B3-U0-G2	B4-U0-G2	B4-U0-G2	B4-U0-G2	B5-U0-G2	B5-U0-G3	B5-U0-G3
5MQ	4000K/5000K Lumens	4,314	8,429	12,578	16,619	20,591	24,641	29,141	33,019	36,832	40,779
	3000K Lumens	3,819	7,461	11,134	14,711	18,227	21,812	25,796	29,228	32,604	36,098
	BUG Rating	B3-U0-G1	B3-U0-G2	B4-U0-G2	B4-U0-G2	B4-U0-G2	B5-U0-G3	B5-U0-G3	B5-U0-G4	B5-U0-G4	B5-U0-G4
5WQ	4000K/5000K Lumens	4,325	8,452	12,611	16,664	20,646	24,707	29,219	33,106	36,930	40,888
	3000K Lumens	3,828	7,482	11,163	14,751	18,276	21,871	25,865	29,305	32,690	36,194
	BUG Rating	B3-U0-G1	B3-U0-G2	B4-U0-G2	B4-U0-G2	B5-U0-G3	B5-U0-G3	B5-U0-G4	B5-U0-G4	B5-U0-G4	B5-U0-G4
SLL/SLR	4000K/5000K Lumens	3,609	7,052	10,522	13,903	17,226	20,613	24,378	27,622	30,812	34,114
	3000K Lumens	3,195	6,242	9,314	12,307	15,248	18,247	21,579	24,451	27,275	30,198
	BUG Rating	B1-U0-G1	B1-U0-G2	B1-U0-G3	B2-U0-G3	B2-U0-G3	B2-U0-G4	B3-U0-G4	B3-U0-G4	B3-U0-G5	B3-U0-G5
RW	4000K/5000K Lumens	4,197	8,202	12,239	16,171	20,036	23,977	28,356	32,129	35,839	39,680
	3000K Lumens	3,715	7,260	10,834	14,315	17,736	21,224	25,101	28,441	31,725	35,125
	BUG Rating	B2-U0-G1	B3-U0-G1	B3-U0-G2	B4-U0-G2	B4-U0-G2	B4-U0-G2	B4-U0-G2	B5-U0-G3	B5-U0-G3	B5-U0-G3
AFL	4000K/5000K Lumens	4,213	8,232	12,284	16,230	20,109	24,064	28,459	32,246	35,969	39,824
	3000K Lumens	3,729	7,287	10,874	14,367	17,800	21,301	25,192	28,544	31,840	35,252
	BUG Rating	B1-U0-G1	B1-U0-G1	B2-U0-G2	B2-U0-G2	B2-U0-G2	B3-U0-G2	B3-U0-G3	B3-U0-G3	B3-U0-G3	B3-U0-G3

* Nominal data for 70 CRI.

CONTROL OPTIONS

0-10V (DIM)
This fixture is offered standard with 0-10V dimming driver(s). The DIM option provides 0-10V dimming wire leads for use with a lighting control panel or other control method.

Photocontrol (P, R and PER7)
Optional button-type photocontrol (P) and photocontrol receptacles (R and PER7) provide a flexible solution to enable "dusk-to-dawn" lighting by sensing light levels. Advanced control systems compatible with NEMA 7-pin standards can be utilized with the PER7 receptacle.

After Hours Dim (AHD)
This feature allows photocontrol-enabled luminaires to achieve additional energy savings by dimming during scheduled portions of the night. The dimming profile will automatically take effect after a "dusk-to-dawn" period has been calculated from the photocontrol input. Specify the desired dimming profile for a simple, factory-shipped dimming solution requiring no external control wiring. Reference the After Hours Dim supplemental guide for additional information.

Dimming Occupancy Sensor (MS/DIM-LXX, MS/X-LXX and MS-LXX)
These sensors are factory installed in the luminaire housing. When the MS/DIM-LXX sensor option is selected, the occupancy sensor is connected to a dimming driver and the entire luminaire dims when there is no activity detected. When activity is detected, the luminaire returns to full light output. The MS/DIM sensor is factory preset to dim down to approximately 50 percent power with a time delay of five minutes. The MS-LXX sensor is factory preset to turn the luminaire off after five minutes of no activity. The MS/X-LXX is also preset for five minutes and only controls the specified number of light engines to maintain steady output from the remaining light engines.

These occupancy sensors includes an integral photocell that can be activated with the FSIR-100 accessory for "dusk-to-dawn" control or daylight harvesting - the factory preset is OFF. The FSIR-100 is a wireless tool utilized for changing the dimming level, time delay, sensitivity and other parameters.

A variety of sensor lens are available to optimize the coverage pattern for mounting heights from 8'-40'.

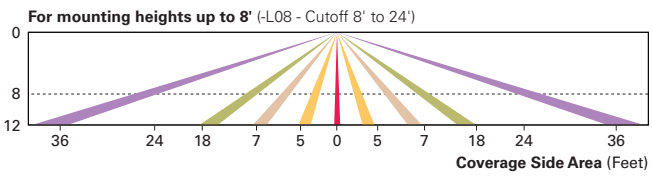

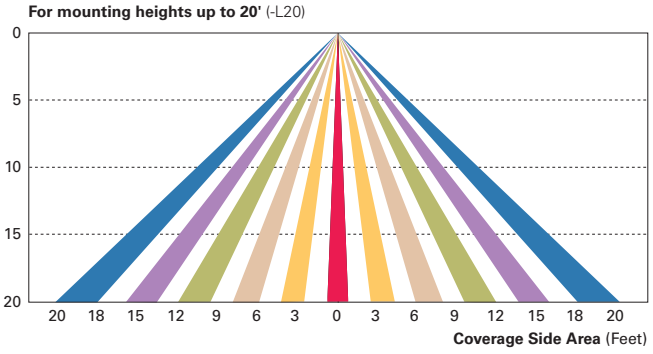

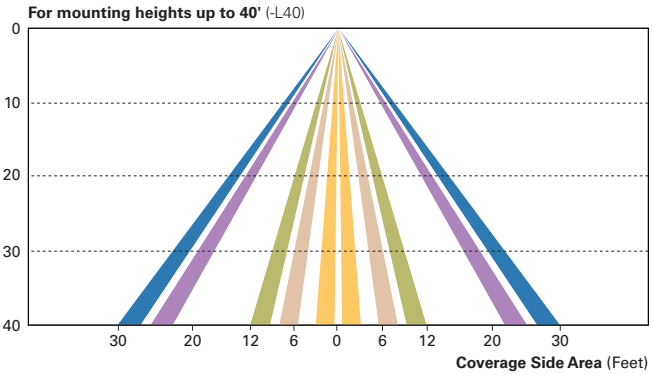

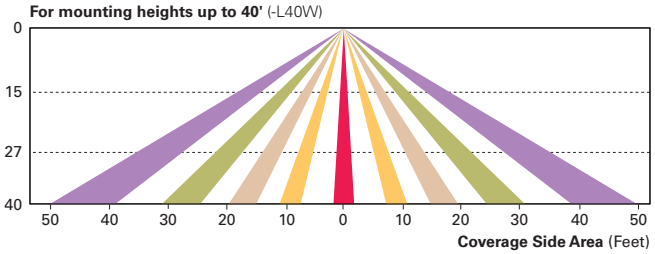

LumaWatt Wireless Control and Monitoring System (LWR-LW and LWR-LN)
The LumaWatt system is a peer-to-peer wireless network of luminaire-integral sensors for any sized project. Each sensor is capable of motion and photo sensing, metering power consumption and wireless communication. The end-user can securely create and manage sensor profiles with browser-based management software. The software will automatically broadcast to the sensors via wireless gateways for zone-based and individual luminaire control. The LumaWatt software provides smart building solutions by utilizing the sensor to provide easy-to-use dashboard and analytic capabilities such as improved energy savings, traffic flow analysis, building management software integration and more.

For additional details, refer to the LumaWatt product guides.

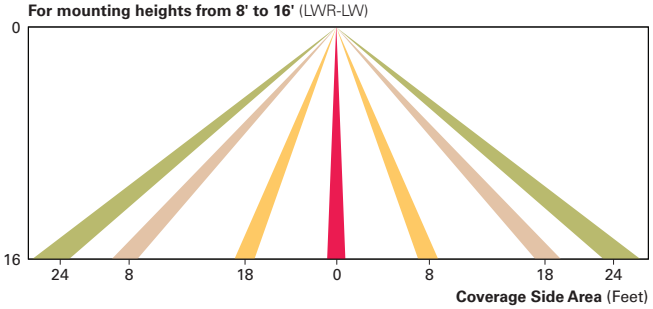

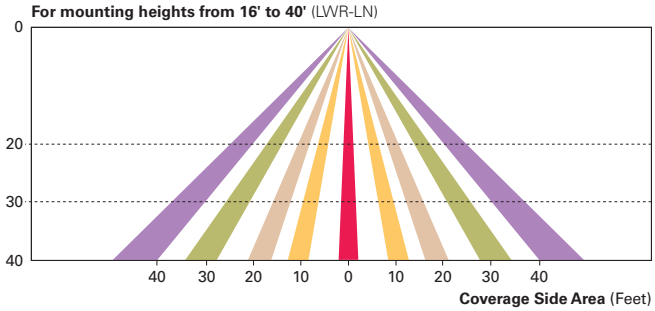

ORDERING INFORMATION

Sample Number: GLEON-AF-04-LED-E1-T3-GM-QM

Product Family [1, 2]	Light Engine	Number of Light Squares [3]	Lamp Type	Voltage	Distribution	Color	Mounting
GLEON=Galleon	**AF**=1A Drive Current	**01**=1 **02**=2 **03**=3 **04**=4 **05**=5 **06**=6 **07**=7 [4] **08**=8 [4] **09**=9 [5] **10**=10 [5]	**LED**=Solid State Light Emitting Diodes	**E1**=120-277V **347**=347V [6] **480**=480V [6, 7]	**T2**=Type II **T2R**=Type II Roadway **T3**=Type III **T3R**=Type III Roadway **T4FT**=Type IV Forward Throw **T4W**=Type IV Wide **5NQ**=Type V Narrow **5MQ**=Type V Square Medium **5WQ**=Type V Square Wide **SL2**=Type II w/Spill Control **SL3**=Type III w/Spill Control **SL4**=Type IV w/Spill Control **SLL**=90° Spill Light Eliminator Left **SLR**=90° Spill Light Eliminator Right **RW**=Rectangular Wide Type I **AFL**=Automotive Frontline	**AP**=Grey **BZ**=Bronze **BK**=Black **DP**=Dark Platinum **GM**=Graphite Metallic **WH**=White	**[Blank]**=Arm for Round or Square Pole **EA**=Extended Arm [8] **MA**=Mast Arm Adapter [9] **WM**=Wall Mount **QM**=Quick Mount Arm (Standard Length) [10] **QMEA**=Quick Mount Arm (Extended Length) [11]

Options (Add as Suffix)

7030=70 CRI 3000K [12]
8030=80 CRI 3000K [13]
7050=70 CRI 5000K [12]
7060=70 CRI 6000K [12]
600=Drive Current Factory Set to Nominal 600mA [14]
800=Drive Current Factory Set to Nominal 800mA [14]
1200=Drive Current Factory Set to Nominal 1200mA [14, 15]
F=Single Fuse (120, 277 or 347V. Must Specify Voltage)
FF=Double Fuse (208, 240 or 480V. Must Specify Voltage)
2L=Two Circuits [16, 17]
DIM=External 0-10V Dimming Leads
P=Button Type Photocontrol (120, 208, 240 or 277V. Must Specify Volatage)
PER7=NEMA 7-PIN Twistlock Photocontrol Receptacle
R=NEMA Twistlock Photocontrol Receptacle
AHD145=After Hours Dim, 5 Hours [18]
AHD245=After Hours Dim, 6 Hours [18]
AHD255=After Hours Dim, 7 Hours [18]
AHD355=After Hours Dim, 8 Hours [18]
HA=50°C High Ambient [19]
MS/DIM-L08=Motion Sensor for Dimming Operation, Maximum 8' Mounting Height [20, 21]
MS/DIM-L20=Motion Sensor for Dimming Operation, 9' - 20' Mounting Height [20, 22]
MS/DIM-L40=Motion Sensor for Dimming Operation, 21' - 40' Mounting Height [20, 23]
MS/DIM-L40W=Motion Sensor for Dimming Operation, 21' - 40' Mounting Height (Wide Range) [20, 24]
MS/X-L08=Bi-Level Motion Sensor, Maximum 8' Mounting Height [20, 21, 25]
MS/X-L20=Bi-Level Motion Sensor, 9' - 20' Mounting Height [20, 22, 25]
MS/X-L40=Bi-Level Motion Sensor, 21' - 40' Mounting Height [20, 23, 25]
MS/X-L40W=Bi-Level Motion Sensor, 21' - 40' Mounting Height (Wide Range) [20, 24, 25]
MS-L08=Motion Sensor for ON/OFF Operation, Maximum 8' Mounting Height [20, 21]
MS-L20=Motion Sensor for ON/OFF Operation, 9' - 20' Mounting Height [20, 22]
MS-L40=Motion Sensor for ON/OFF Operation, 21' - 40' Mounting Height [20, 23]
MS-L40W=Motion Sensor for ON/OFF Operation, 21' - 40' Mounting Height (Wide Range) [20, 24]
LWR-LW=LumaWatt Wireless Sensor, Wide Lens for 8' - 16' Mounting Height [26]
LWR-LN=LumaWatt Wireless Sensor, Narrow Lens for 16' - 40' Mounting Height [26]
L90=Optics Rotated 90° Left
R90=Optics Rotated 90° Right
MT=Factory Installed Mesh Top
TH=Tool-less Door Hardware
LCF=Light Square Trim Plate Painted to Match Housing [27]
HSS=Factory Installed House Side Shield [28]
CE=CE Marking [29]

Accessories (Order Separately)

OA/RA1016=NEMA Photocontrol Multi-Tap - 105-285V
OA/RA1027=NEMA Photocontrol - 480V
OA/RA1201=NEMA Photocontrol - 347V
OA/RA1013=Photocontrol Shorting Cap
OA/RA1014=120V Photocontrol
MA1252=10kV Surge Module Replacement
MA1036-XX=Single Tenon Adapter for 2-3/8" O.D. Tenon
MA1037-XX=2@180° Tenon Adapter for 2-3/8" O.D. Tenon
MA1197-XX=3@120° Tenon Adapter for 2-3/8" O.D. Tenon
MA1188-XX=4@90° Tenon Adapter for 2-3/8" O.D. Tenon
MA1189-XX=2@90° Tenon Adapter for 2-3/8" O.D. Tenon
MA1190-XX=3@90° Tenon Adapter for 2-3/8" O.D. Tenon
MA1191-XX=2@120° Tenon Adapter for 2-3/8" O.D. Tenon
MA1038-XX=Single Tenon Adapter for 3-1/2" O.D. Tenon
MA1039-XX=2@180° Tenon Adapter for 3-1/2" O.D. Tenon
MA1192-XX=3@120° Tenon Adapter for 3-1/2" O.D. Tenon
MA1193-XX=4@90° Tenon Adapter for 3-1/2" O.D. Tenon
MA1194-XX=2@90° Tenon Adapter for 3-1/2" O.D. Tenon
MA1195-XX=3@90° Tenon Adapter for 3-1/2" O.D. Tenon
FSIR-100=Wireless Configuration Tool for Occupancy Sensor [20]
GLEON-MT1=Field Installed Mesh Top for 1-4 Light Squares
GLEON-MT2=Field Installed Mesh Top for 5-6 Light Squares
GLEON-MT3=Field Installed Mesh Top for 7-8 Light Squares
GLEON-MT4=Field Installed Mesh Top for 9-10 Light Squares
GLEON-QM=Quick Mount Arm Kit
GLEON-QMEA=Quick Mount Extended Arm Kit
LS/HSS=Field Installed House Side Shield [28, 30]

NOTES:
1. Customer is responsible for engineering analysis to confirm pole and fixture compatibility for all applications. Refer to our white paper WP513001EN for additional support information.
2. DesignLights Consortium™ Qualified. Refer to www.designlights.org Qualified Products List under Family Models for details.
3. Standard 4000K CCT and minimum 70 CRI.
4. Not compatible with extended quick mount arm (QMEA).
5. Not compatible with standard quick mount arm (QM) or extended quick mount arm (QMEA).
6. Requires the use of an internal step down transformer when combined with sensor options. Not available with sensor at 1200mA. Not available in combination with the HA high ambient and sensor options at 1A.
7. Only for use with 480V Wye systems. Per NEC, not for use with ungrounded systems, impedance grounded systems or corner grounded systems (commonly known as Three Phase Three Wire Delta, Three Phase High Leg Delta and Three Phase Corner Grounded Delta systems).
8. May be required when two or more luminaires are oriented on a 90° or 120° drilling pattern. Refer to arm mounting requirement table.
9. Factory installed.
10. Maximum 8 light squares.
11. Maximum 6 light squares.
12. Extended lead times apply. Use dedicated IES files for 3000K, 5000K and 6000K when performing layouts. These files are published on the Galleon luminaire product page on the website.
13. Extended lead times apply. Use dedicated IES files for 3000K, 5000K and 6000K when performing layouts. These files are published on the Galleon luminaire product page on the website.
14. 1 Amp standard. Use dedicated IES files for 600mA, 800mA and 1200mA when performing layouts. These files are published on the Galleon luminaire product page on the website.
15. Not available with HA option.
16. 2L is not available with MS, MS/X or MS/DIM at 347V or 480V. 2L in AF-02 through AF-04 requires a larger housing, normally used for AF-05 or AF-06. Extended arm option may be required when mounting two or more fixtures per pole at 90° or 120°. Refer to arm mounting requirement table.
17. Not available with LumaWatt wireless sensors.
18. Requires the use of P photocontrol or the PER7 or R photocontrol receptacle with photocontrol accessory. See After Hours Dim supplemental guide for additional information.
19. 50°C lumen maintenance data applies to 600mA, 800mA and 1A drive currents.
20. The FSIR-100 configuration tool is required to adjust parameters including high and low modes, sensitivity, time delay, cutoff and more. Consult your lighting representative at Eaton for more information.
21. Approximately 22' detection diameter at 8' mounting height.
22. Approximately 40' detection diameter at 20' mounting height.
23. Approximately 60' detection diameter at 40' mounting height.
24. Approximately 100' detection diameter at 40' mounting height.
25. Replace X with number of Light Squares operating in low output mode.
26. LumaWatt wireless sensors are factory installed only requiring network components RF-EM-1, RF-GW-1 and RF-ROUT-1 in appropriate quantities. See www.eaton.com/lighting for LumaWatt application information.
27. Not available with house side shield (HSS).
28. Only for use with SL2, SL3, SL4 and AFL distributions. The Light Square trim plate is painted black when the HSS option is selected.
29. CE is not available with the LWR, MS, MS/X, MS/DIM, P, R or PER7 options. Available in 120-277V only.
30. One required for each Light Square.

Invue

DESCRIPTION

The Invue Arbor post top brings architectural style to area/site and pedestrian scale applications. Its dayform appearance brings a desired organic look into the urban environment. WaveStream™ LED Optics provide a uniform pixelation free image, managing glare while providing high levels of visibility.

Catalog #		**Type**
Project		
Comments		**Date**
Prepared by		

SPECIFICATION FEATURES

Construction
Two-piece IP66 rated housing is cast from low copper content corrosion resistant aluminum, maintaining strength and precision to sustain long term dayform appearance. ANSI C136.31 testing compliance prevents damage from installation generated vibration. External hardware and casting seams are minimized to enhance appearance.

Optics
Specifically designed for pedestrian applications, WaveStream LED optical waveguide technology produces both symmetric NEMA type V and asymmetric NEMA II, III, IV distributions. The waveguide is manufactured from precision injection molded acrylic resulting in a pixelation free optical image for improved glare control and visual comfort. Luminaire efficacy's measure up to 100 lm/w for 4000K (+/- 275K) CCT at 70 CRI (min), optional 3000K CCT at 80 CRI is also available.

Electrical
LED driver(s) are directly mounted to upper housing thermal pad for optimal thermal performance. Standard 0-10V dimming drivers and Eaton's proprietary surge protection module are designed to withstand 10kV of transient line surge. Drivers operate at 120-277V 50/60Hz with 347V/60Hz or 480V/60Hz operation optional. Suitable for ambient temperature applications from -30°C (-22°F) to 40°C (104°F). Limited high ambient options allow for 50°C operation.

Controls
The Arbor LED luminaire control options are designed to be simple and cost-effective ASHRAE and California Title 24 compliant solutions. The ANSI C136.41 compliant NEMA 7-PIN receptacle enables wireless dimming when used with compatible photocontrol. An integrated dimming and occupancy sensor is a standalone control option available in on/off (MS) and bi-level dimming (MS/DIM) operation. The optional LumaWatt™ system is best described as a peer-to-peer wireless network of luminaire-integral sensors that operate in accordance with programmable profiles. Each sensor is capable of motion and photo sensing, metering power consumption and wireless communication.

Mounting
Fitter assembly mounts over 2-3/8" O.D. tenon and is secured via six concealed stainless steel set screws. Design of fitter provides seamless transition to 3" O.D. round pole top. Additional mounting accessories include a single fixture arm mount, twin fixture arm mount and wall mount arm. Additional pole mount accessories mount to a 3" x 4" long tenon for 4" - 5" O.D. poles tops. For existing 2-3/8" tenons an adapter is shipped standard.

Finish
Eaton utilizes premium ultra-weatherable TGIC based polyester powder coatings that are specifically formulated to withstand extended outdoor exposure. The powders are formulated exclusively for Eaton to serve functionally as well as decorative. Good film appearance combinded with excellent mechanical an exterior exposure qualities display greater than twice as much gloss retention. RAL and custom color matches available. Finish is compliant with ASTM B117 3000hr salt spray standard.

Warranty
Five-year warranty.

ARB ARBOR POST TOP

DECORATIVE LUMINAIRE

DIMENSIONS

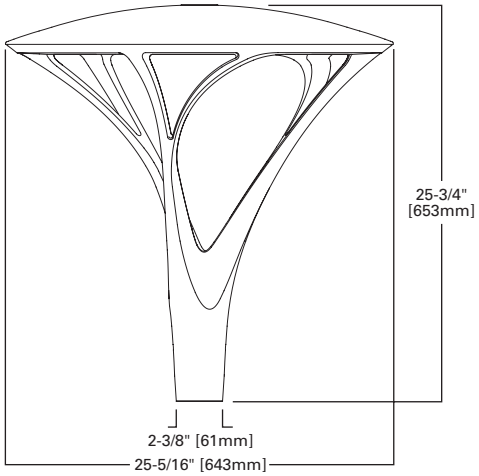

CERTIFICATION DATA
UL/cUL Listed
IP66 Housing
ANSI C136.31
1.5G Vibration Tested
RoHS
ISO 9001
DesignLights Consortium™ Qualified*

ENERGY DATA
Electronic LED Driver
>0.9 Power Factor
<20% Total Harmonic Distortion
120-277V 50/60Hz, 347V/60Hz, 480V/60Hz
-30°C Minimum Temperature
40°C Ambient Temperature Rating

EPA
Effective Projected Area: (Sq. Ft.) 0.9

Approximate Net Weight:
37 lbs. [16.8 kgs.]

Powering Business Worldwide

*www.designlights.org

MOUNTING CONFIGURATIONS (WEIGHT AND EPAS INCLUDES FIXTURE)

Single Arm Mount
Weight: 56 lbs. [25.45 kgs.]
EPA: 1.7 sq/ft

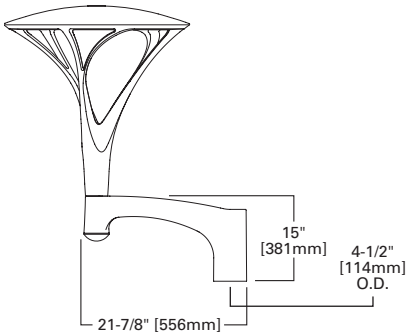

Wall Mount Arm
Weight: 57 lbs. [25.91 kgs.]
EPA: 1.8 sq/ft

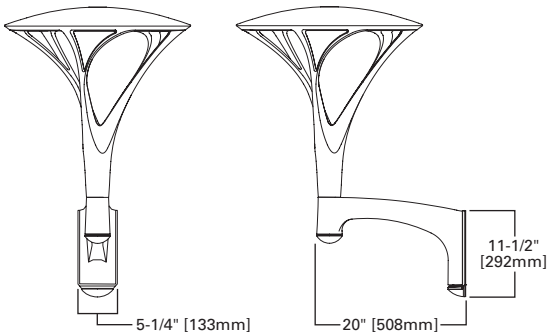

Wall Mount Arm Drill Pattern

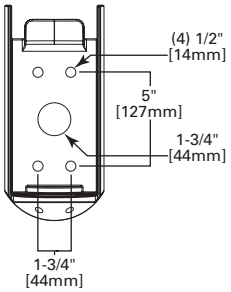

Post Top Adapter
Weight: 41 lbs. [18.63 kgs.]
EPA: 1.2 sq/ft

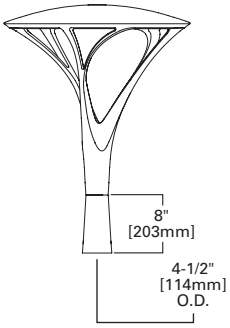

Twin Arm Mount - 1.5G
Weight: 114 lbs. [51.81 kgs.]
EPA: 3.45 sq/ft

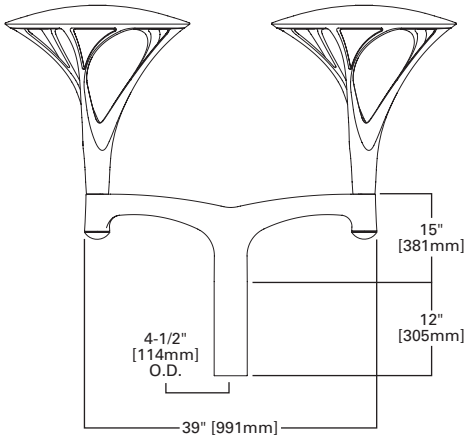

POLE CONFIGURATIONS

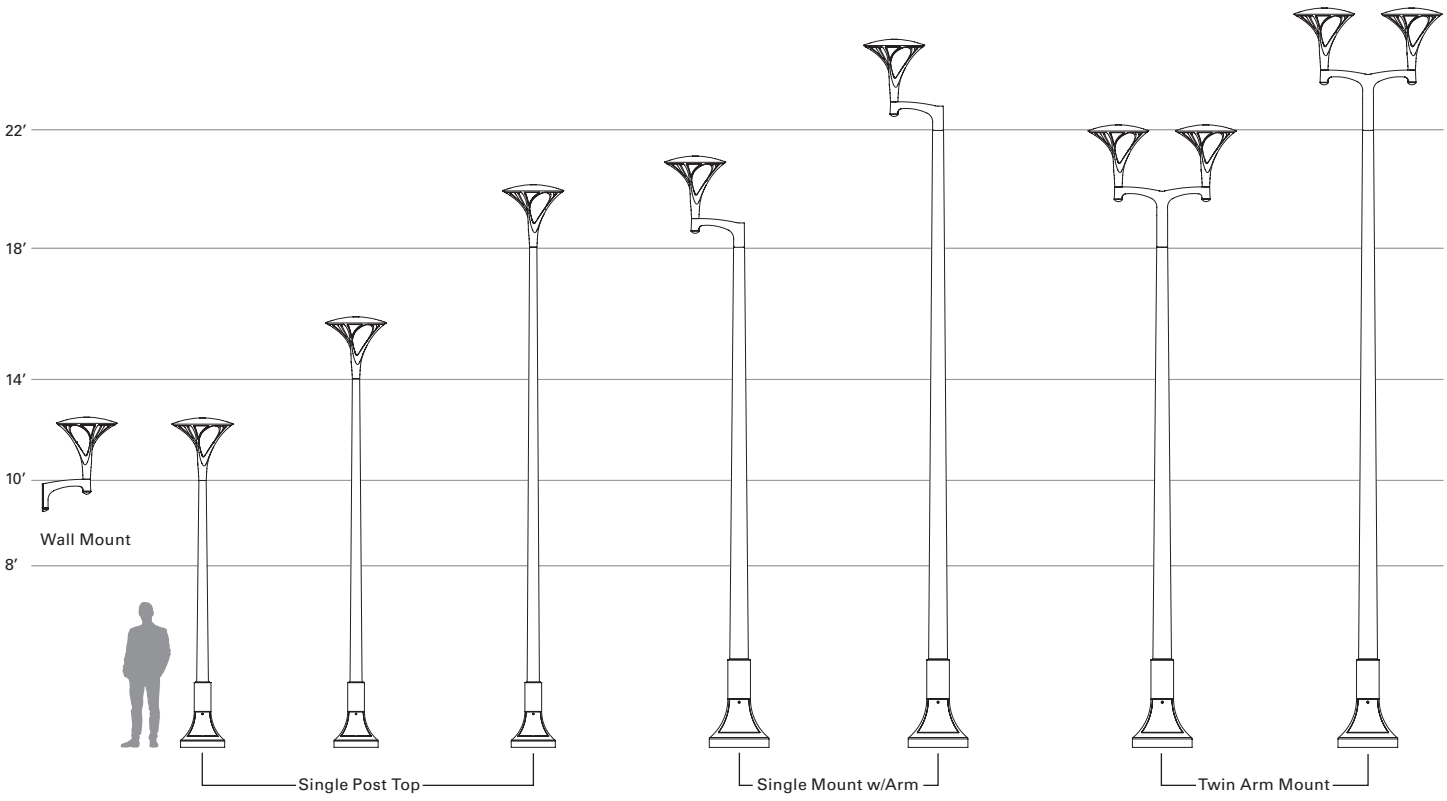

Eaton
1121 Highway 74 South
Peachtree City, GA 30269
P: 770-486-4800
www.eaton.com/lighting

Specifications and dimensions subject to change without notice.

POWER AND LUMENS

Lumen Package		B1	B2	B3	B4
Drive Current					
Power Wattage (Watts)		24W	48W	96W	99W
Input Current (mA) @ 120V		200	400	800	830
Input Current (mA) @ 208V		120	240	470	480
Input Current (mA) @ 240V		100	200	400	420
Input Current (mA) @ 277V		90	180	350	360
Power Wattage (Watts)		26W	53W	107W	108W
Input Current (mA) @ 347V		79	161	325	328
Input Current (mA) @ 480V		58	117	235	237
Optics					
Type II	Lumens	2,045	3,994	7,362	--
	BUG Rating	B1-U1-G1	B1-U2-G2	B3-U2-G3	--
Type III	Lumens	2,324	4,534	8,451	-
	BUG Rating	B1-U1-G1	B1-U2-G2	B2-U2-G3	--
Type IV	Lumens	2,408	4,691	8,740	--
	BUG Rating	B1-U1-G1	B1-U2-G2	B2-U2-G3	-
Type V	Lumens	2,311	4,529	8,511	9,464
	BUG Rating	B2-U1-G1	B3-U2-G2	B3-U2-G3	B3-U2-G3

COLOR TEMPERATURE

Color Temperature (CCT)	CRI (Nominal)	Multiplier (Hours)
4000	70	1.00
3000	80	0.91

LUMEN MAINTENANCE

Ambient Temperature	TM-21 Lumen Maintenance (60,000 Hours)	Calculated L70 (Hours)
25ºC	>91%	>230,000
40ºC	>88%	>172,000
50ºC	>86%	>142,000

NOTE: Maintenance data applies to the highest drive current and represents the worst case at the highest wattage.

LUMEN MULTIPLIER

Ambient Temperature	Lumen Multiplier
0ºC	1.02
10ºC	1.01
25ºC	1.00
40ºC	0.99
50ºC	0.97

ORDERING INFORMATION

Sample Number: ARB-B2-LED-D1-T2-GM

Product Family [1, 2, 3]	**Lumens** [4]	**Lamp Type** [6]	**Voltage**	**Distribution**	**Color**
ARB=Arbor Post Top	**B1**=Nominal 2,300 Lumens **B2**=Nominal 4,500 Lumens **B3**=Nominal 8,500 Lumens **B4**=Nominal 9,500 Lumens [5]	**LED**=Solid State Light Emitting Diodes	**D1**=Dimming Driver (120-277V) **347**=347V [7] **480**=480V [7, 8]	**T2**=Type II **T3**=Type III **T4**=Type IV **T5**=Type V	**AP**=Grey **BZ**=Bronze **BK**=Black **DP**=Dark Platinum **GM**=Graphite Metallic **WH**=White **CC**=Custom Color [9]

Options (Add as Suffix)	**Accessories** (Order Separately) [19]
7030=70 CRI / 3000K CCT [10] **8030**=80 CRI / 3000K CCT [10] **PC**=Button Type Photocontrol [11] **PER**=Standard 3-PIN Photocontrol Receptacle [11] **PER7**=NEMA 7-PIN Twistlock Photocontrol Receptacle [11, 12] **HA**=50°C High Ambient [13] **MS-LXX**=Photo/Motion Sensor for On/Off Operation [14, 15] **MS/DIM-LXX**=Programmable Photo/Motion Sensor [14, 15, 16] **DIMRF-LX**=LumaWatt Wireless Sensor [7, 14] **5LTD**=Fifth Light Dali Driver [17] **DIM**=0-10V External Dimming Leads [18] **VS**=Tempered Glass Vandal Shield	**ARSA-XX**=Single Pole Mount Arm **ARWM-XX**=Wall Mount Arm **ARTA15-XX**=Twin Mount Bracket - 1.5G [20, 21] **ARPA4-XX**=Pole Adapter 4" **FSIR-100**=Wireless Configuration Tool for Occupancy Sensor [16]

NOTES:
1. Customer is responsible for engineering analysis to confirm pole and fixture compatibility for all applications. Refer to our white paper WP513001EN for additional information.
2. DesignLights Consortium™ Qualified. Refer to www.designlights.org Qualified Products List under Family Models for details.
3. Fixture slipfits over standard 2-3/8" or 3" O.D. tenon.
4. Lumens are nominal. See lumen table for more information.
5. B4 only available with Type V distribution.
6. Standard 4000K CCT, nominal 70 CRI.
7. Requires the use of a step down transformer.
8. Only for use with 480V Wye systems. Per NEC, not for use with ungrounded systems, impedance grounded systems or corner grounded systems (commonly known as Three Phase Three Wire Delta, Three Phase High Leg Delta and Three Phase Corner Grounded Delta systems).
9. Cutsom and RAL color matching available upon request. Consult your lighting representative at Eaton for more information.
10. Extended lead times apply. Use dedicated IES files when performing layouts. These files are published on the Arbor luminaire product page on the website.
11. Not available with MS, MSDIM or DIMRF options.
12. Compatible with standard 3-PIN photocontrols and 5-PIN or 7-PIN ANSI controls.
13. Not available with Type II, III and IV B3 optics.
14. Not available with HA option.
15. Replace XX with mounting height in feet for proper lens selection, L8, L20 and L40 are available options.
16. This tool enables adjustment of parameters including high and low modes, sensitivity, time delay, cutoff and more. Consult your lighting representative at Eaton for more information.
17. Only available with B1 and B2 lumen packages.
18. Low voltage control leads brought out 18" outside fixture. Not available with control options.
19. Replace XX with color designation.
20. Fits on 3" O.D. x 4" long tenon only.

McGraw-Edison

DESCRIPTION

The Impact Elite family of wall luminaires is the ideal complement to site design. Incorporating modular LightBAR™ technology, the Impact Elite luminaire provides outstanding uniformity and energy-conscious illumination. Combined with a rugged construction, the Impact Elite luminaire is the ideal facade and security luminaire for zones surrounding schools, office complexes, apartments and recreational facilities. UL/cUL listed for wet locations.

Catalog #		**Type**
Project		
Comments		**Date**
Prepared by		

SPECIFICATION FEATURES

Construction
Heavy-wall, die-cast aluminum housing and removable hinged door frame for precise tolerance control and repeatability. Hinged door inset for clean mating with housing surface and secured via two captive fasteners. Optional tamper-resistant Torx™ head fasteners offer vandal resistant access to the electrical chamber.

Optics
Choice of six patented, high-efficiency AccuLED Optics™ distributions. Optics are precisely designed to shape the light output, maximizing efficiency and application spacing. AccuLED Optics technology creates consistent distributions with the scalability to meet customized application requirements. Offered Standard in 4000K (+/- 275K) CCT and minimum 70 CRI. Optional 3000K CCT, 5000K CCT and 5700K CCT.

Electrical
LED drivers mount to die-cast aluminum back housing for optimal heat sinking, operation efficacy, and prolonged life. Standard drivers feature electronic universal voltage (120-277V 50/60Hz), 347V 60Hz or 480V 60Hz operation, greater than 0.9 power factor, less than 20% harmonic distortion, and are suitable for operation in -40°C to 40°C ambient environments. All fixtures are shipped standard with 10kV/10kA common – and differential – mode surge protection. LightBARs feature an IP66 enclosure rating and maintain greater than 95% lumen maintenance at 60,000 hours per IESNA TM-21. Emergency egress options for -20°C ambient environments and occupancy sensor available.

Mounting
Gasketed and zinc plated rigid steel mounting attachment fits directly to 4" j-box or wall with the Impact Elite "Hook-N-Lock" mechanism for quick installation. Secured with two captive corrosion resistant black oxide coated allen head set screws concealed but accessible from bottom of fixture.

Finish
Cast components finished in a five-stage super TGIC polyester powder coat paint, 2.5 mil nominal thickness for superior protection against fade and wear. Standard colors include black, bronze, grey, white, dark platinum and graphite metallic. RAL and custom color matches available. Consult the McGraw-Edison Architectural Colors brochure for the complete selection.

Warranty
Five-year warranty.

DIMENSIONS

Cylinder

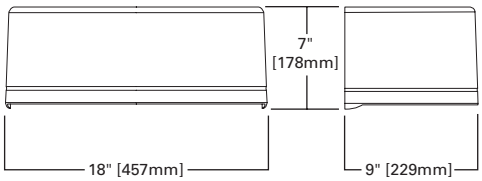

Quarter Sphere

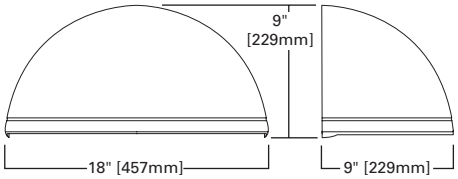

Trapezoid

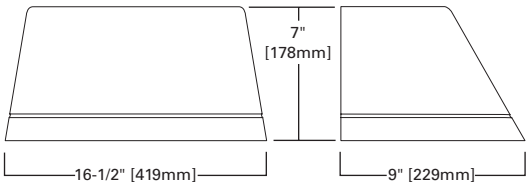

Wedge

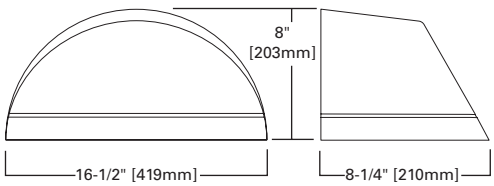

HOOK-N-LOCK MOUNTING

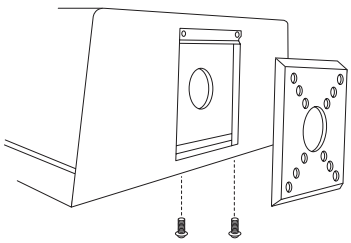

ISC/ISS/IST/ISW
IMPACT ELITE LED

1 - 2 LightBARs
Solid State LED

WALL MOUNT LUMINAIRE

CERTIFICATION DATA
UL/cUL Listed
LM79 / LM80 Compliant
IP66 LightBARs
ISO 9001
DesignLights Consortium® Qualified*

ENERGY DATA
Electronic LED Driver
>0.9 Power Factor
<20% Total Harmonic Distortion
120-277V/50 & 60Hz, 347V/60Hz, 480V/60Hz
-40°C Minimum Temperature
40°C Ambient Temperature Rating

SHIPPING DATA
Approximate Net Weight:
18 lbs. (8 kgs.)

Powering Business Worldwide

*www.designlights.org

THRUWAY BACK BOX

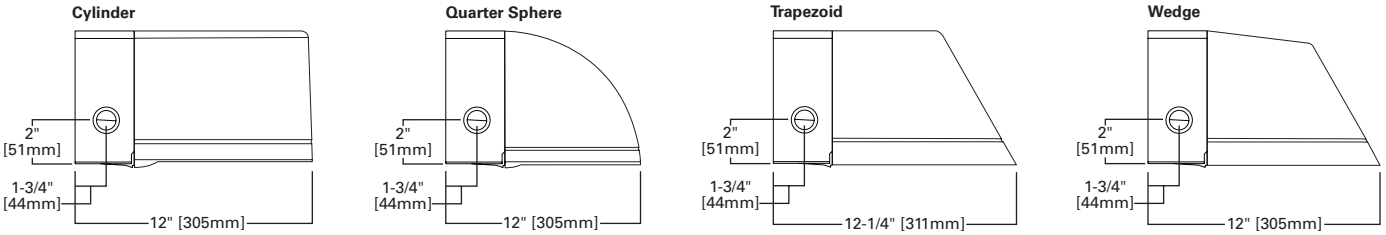

POWER AND LUMENS BY BAR COUNT

Number of LightBARs		E01	E02	F01	F02
		21 LED LightBAR		7 LED LightBAR	
Drive Current		350mA		1A	
Power (Watts)	120-277V	25W	47W	26W	50W
Current (A)	120V	0.22	0.40	0.22	0.42
	277V	0.10	0.18	0.10	0.19
Power (Watts)	347V or 480V	31W	52W	32W	55W
Current (A)	347V	0.11	0.16	0.11	0.17
	480V	0.16	0.18	0.16	0.18
Optics					
BL2	Lumens	2,738	5,476	2,260	4,521
	Bug Rating	B1-U0-G1	B1-U0-G1	B1-U0-G1	B1-U0-G1
BL3	Lumens	2,702	5,405	2,231	4,462
	Bug Rating	B1-U0-G1	B1-U0-G2	B1-U0-G1	B1-U0-G1
BL4	Lumens	2,613	5,225	2,157	4,313
	Bug Rating	B1-U0-G1	B1-U0-G2	B1-U0-G1	B1-U0-G1
GZW	Lumens	2,785	5,570	2,299	4,598
	Bug Rating	B2-U0-G2	B3-U0-G3	B1-U0-G1	B2-U0-G2
SLR/SLL	Lumens	2,435	4,869	2,010	4,020
	Bug Rating	B1-U0-G1	B1-U0-G2	B1-U0-G1	B1-U0-G2

LUMEN MAINTENANCE

Ambient Temperature	25,000 Hours*	50,000 Hours*	60,000 Hours*	100,000 Hours	Theoretical L70 (Hours)
25ºC	> 99%	> 97%	> 96%	> 93%	> 450,000
40ºC	> 98%	> 97%	> 96%	> 92%	> 425,000
50ºC	> 97%	> 96%	> 95%	> 91%	> 400,000

* Per IESNA TM-21 data.

LUMEN MULTIPLIER

Ambient Temperature	Lumen Multiplier
10ºC	1.02
15ºC	1.01
25ºC	1.00
40ºC	0.99

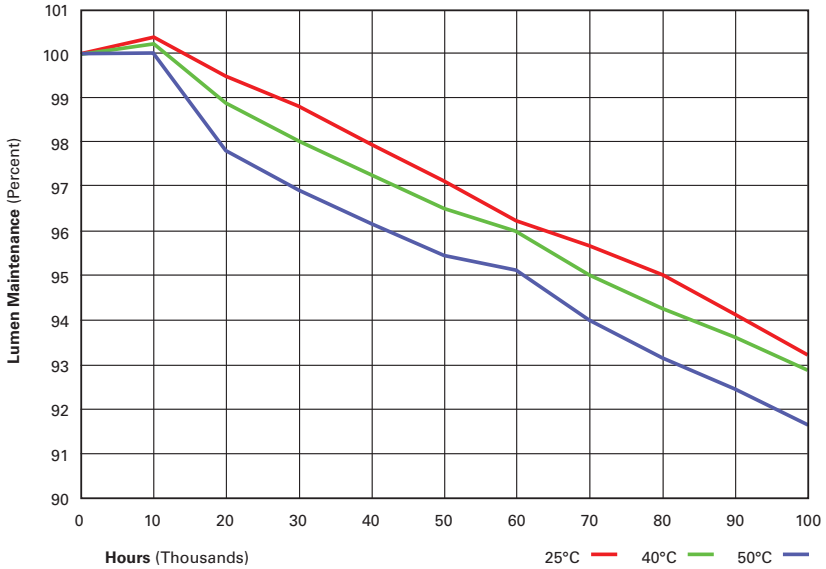

ORDERING INFORMATION

Sample Number: ISC-E02-LED-E1-BL3-GM

Product Family [1]	Number of LightBARs [2, 3]	Lamp Type	Voltage	Distribution	Color [5]
ISC=Impact Elite LED Small Cylinder **ISS**=Impact Elite LED Small Quarter Sphere **IST**=Impact Elite LED Small Trapezoid **ISW**=Impact Elite LED Small Wedge	**E01**=(1) 21 LED LightBAR **E02**=(2) 21 LED LightBARs **F01**=(1) 7 LED LightBAR **F02**=(2) 7 LED LightBARs	**LED**=Solid State Light Emitting Diodes	**E1**=Electronic (120-277V) **347**=347V **480**=480V [4]	**BL2**=Type II w/Back Light Control **BL3**=Type III w/Back Light Control **BL4**=Type IV w/Back Light Control **GZW**=Wall Grazer Wide **SLL**=90° Spill Light Eliminator Left **SLR**=90° Spill Light Eliminator Right	**AP**=Grey **BZ**=Bronze **BK**=Black **DP**=Dark Platinum **GM**=Graphite Metallic **WH**=White

Options (Add as Suffix)	**Accessories** (Order Separately) [11]
2L=Two Circuits [6] **7030**=70 CRI / 3000K CCT [7] **7050**=70 CRI / 5000K CCT [7] **7060**=70 CRI / 5700K CCT [7] **8030**=80 CRI / 3000K CCT [7] **P**=Button Type Photocontrol (Available in 120, 208, 240 or 277V. Must Specify Voltage) **OSB**=Occupancy Sensor with Back Box (Specify 120V or 277V) [8] **BBB-XX**=Battery Pack with Back Box (Specify 120V or 277V) [9] **CWB-XX**=Cold Weather Battery Pack with Back Box (Specify 120V or 277V) [10] **DIM**=0-10V Dimming Drivers **LCF**=LightBAR Cover Plate Matches Housing Finish **ULG**=Uplight Glow **TR**=Tamper Resistant Hardware	**MA1253**=10kV Circuit Module Replacement **MA1254-XX**=Thruway Back Box - Impact Elite Trapezoid **MA1255-XX**=Thruway Back Box - Impact Elite Cylinder **MA1256-XX**=Thruway Back Box - Impact Elite Quarter Sphere **MA1257-XX**=Thruway Back Box - Impact Elite Wedge

NOTES:

1. DesignLights Consortium® Qualified. Refer to www.designlights.org Qualified Products List under Family Models for details.
2. Standard 4000K CCT and greater than 70 CRI. LightBARs for downlight use only.
3. 21 LED LightBAR powered by 350mA and 7 LED LightBAR powered by 1A.
4. Only for use with 480V Wye systems. Per NEC, not for use with ungrounded systems, impedance grounded systems or corner grounded systems (commonly known as Three Phase Three Wire Delta, Three Phase High Leg Delta and Three Phase Corner Grounded Delta systems).
5. Custom and RAL color matching available upon request. Consult your lighting representative at Eaton for more information.
6. Low-level output varies by bar count. Consult factory. Not available with 347V or 480V. Available with two bars (E02 or F02) only.
7. Extended lead times apply.
8. Available with E02 or F02, only one bar on street side will be wired to sensor. Time delay factory setting 15-minutes. When ordered with PC option, both bars are connected to photocontrol as primary switching means. Standard sensor lens covers 8' mounting height, 360° coverage, maximum 48' diameter. Not available in all configurations or with BBB or CWB options.
9. Specify 120V or 277V. LED standard integral battery pack is rated for minimum operating temperature 32°F (0°C). Operates one bar for 90-minutes. Not available in all configurations or with OSB option. Consult factory.
10. Specify 120V or 277V. LED cold weather integral battery pack is rated for minimum operating temperature -4°F (-20°C). Operates one bar for 90-minutes. Not available in all configurations or with OSB option. Consult factory.
11. Replace XX with color suffix.

Powering Business Worldwide

Eaton
1121 Highway 74 South
Peachtree City, GA 30269
P: 770-486-4800
www.eaton.com/lighting

Specifications and dimensions subject to change without notice.

Inground

UHA-60295

Harrier 3 Inground LED

LIGMAN LIGHTING USA

A top range of inground uplights with a choice of round or square stainless steel or painted aluminum front rings. This 7.87" inground luminaire is provided with a low output LED board and integral driver, and is suitable as a marker light for illuminating shopping and pedestrian areas, parks, gardens and sculptures. This low glare luminaire is provided with a 0.4" thick tempered glass and is rated as a walkover luminaire. The glass has a special wrap around high temperature silicone gasket that provides additional ingress protection. A non slip lens is available as an option. This non slip coating is a proprietary coating that is infused into the glass to provide excellent traction in wet conditions.
To ensure efficient drainage, gravel must be used to a depth of 17" beneath the housing, and should also be placed around the luminaire. Low copper content die-cast aluminum housing with high corrosion resistance. The 0.24" thick front ring is available in grade 316 stainless steel or aluminum. Stainless steel fasteners in grade 316. Power is provided through a single PG1/2" watertight cable gland.
UF-B 600v underground feeder cable is recommended to provide power to the luminaire. Standard recessing box in high density polyethylene.

NOTE: This luminaire is provided with an integral driver, however a remote mounted driver, as well as a waterproof remote driver box as an option and should be specified.

Physical Data

Length • 7.87"

Height • 9.6"

Weight • 4.6 lbs (A) 5 lbs (S)

IP67 • Suitable For Wet Locations

IK10 • Impact Resistant (Vandal Resistant)

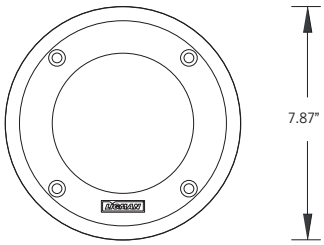

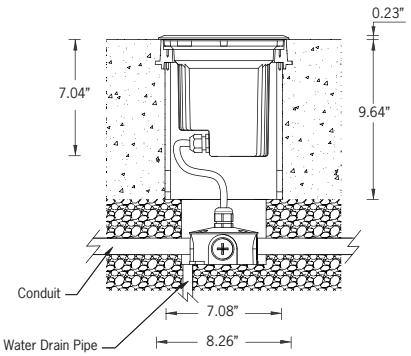

Aluminum Casting
Less than 0.1% copper content – Marine Grade LM6 Aluminum High Pressure die casting provides excellent mechanical strength , clean detailed product lines and excellent heat dissipation.

Pre paint
8 step degrease and phosphate process that includes deoxidizing and etching as well as a zinc and nickel phosphate process before product painting.

Memory Retentive -Silicon Gasket.
Provided with special injection molded **"fit for purpose"** long life high temperature **memory retentive silicon gaskets**. Maintains the gaskets exact profile and seal over years of use and compression.

Thermal management.
LM6 Aluminum is used for its **excellent mechanical strength and thermal dissipation properties** in low and high ambient temperatures. The superior thermal heat sink design by Ligman used in conjunction with the driver, controls thermals below critical temperature range to ensure maximum luminous flux output, as well as providing long LED service life and ensuring less than 10% lumen depreciation at 50,000 hours.

Surge Suppression
Standard 10kv surge suppressor provided with all fixtures.

BUG Rating
B0 - U1 - G0

Finishing
All Ligman products go through an extensive finishing process that includes fettling to improve paint adherence.

Paint.
UV Stabilized 4.9Mil thick powder coat paint and baked at 200 Deg C.
This process ensures that Ligman products can withstand harsh environments.
Rated for use in natatoriums.

Hardware.
Provided Hardware is **Marine grade 316 Stainless steel.**

Anti Seize Screw Holes
Tapped holes are infused with a **special anti seize compound** designed to prevent seizure of threaded connections, due to electrolysis from heat, corrosive atmospheres and moisture.

Crystal Clear Low Iron Glass Lens.
Provided with tempered, impact resistant **crystal clear low iron glass** ensuring no green glass tinge.

Optics & LED
Precise optic design provides **exceptional light control and precise distribution of light.**
LED CRI > 80

Lumen - Maintenance Life
L80 /B10 at 50,000 hours (This means that at least 90% of the LED still achieve 80% of their original flux)

Standard Options

Lamp	Frame	LED Color	Finish Color	Lens
3w LED 194 Lumens	A • Aluminum [Choose Finish Color] S • Stainless Steel	W27 • 2700K W30 • 3000K W40 • 4000K	01 - Black - RAL 9011 02 - Dark Grey - RAL 7043 03 - White - RAL 9003 04 - Metallic Silver - RAL 9006 05 - Matte Silver - RAL 9006 06 - Bronze - RAL 6014 07 - Custom RAL	C • Clear Lens F • Frosted Lens

Options (Consult Factory for Pricing)

A60212 - Anti-Slip Glass

Ordering Example : UHA - 60385 - 8w - A - W30 - 02 - C - 120/277v

	Lamp	Frame	LED Color	Color	Lens	Voltage	Options
UHA	60385	8w LED					
		S Stainless Steel A Aluminum (Choose Color)	W27 2700K W30 3000K W40 4000K	01 Black 02 Dark Grey 03 White 04 Metallic Silver 05 Matte Silver 06 Bronze 07 Custom RAL	C Clear F Frosted	120/277v Other (Specify)	A60212 Anti-Slip Glass

PROJECT: DATE: QUANTITY:

TYPE: NOTE:

Ligman Lighting USA reserves the right to change specifications without prior notice, please contact factory for latest information.
Due to the continual improvements in LED technology data and components may change without notice.

Head Office:
7144 NW Progress Ct
Hillsboro, Oregon 97124
Tel: 503-645-0500
Fax: 503-645-8100
www.ligmanlightingusa.com

Intertek

Iris

DESCRIPTION

Recessed shallow lens LED downlight luminaire with 4 inch square aperture utilizing a LED array. Modular platform can be reconfigured from below the ceiling to accept a broad range of lamp modules and optical elements. Platform is suitable for 2x6 residential or shallow plenum commercial applications. Insulation must be kept 3" from top and sides of housing. Platform + module + element combination produces square distribution with excellent light control and low aperture brightness.

Catalog #		**Type**
Project		
Comments		**Date**
Prepared By		

SPECIFICATION FEATURES

Frame
Galvanized steel plaster frame with integral bar hanger receivers. Setscrews provide positive horizontal locking.

Collar
Matte black aluminum collar adjusts vertically for ½" - 1" thick ceilings and can be rotated ± 7.5° thru the aperture. Integral gun sights facilitate the use of guide strings or laser lines. Shipped with a paint overspray protector.

Housing
Steel housing painted matte black for a visually dark interior. Removable hinged cover allow for top access. All fasteners are captive.

Bar Hangers
Captive preinstalled bar hangers adjust from 8-1/2" to 24" wide; pass thru allows shortening without removal. Captive nail penetrates standard and engineered lumber. Mounting flange levels platform with ceiling. Integral clip attaches direction to tee grid.

Universal Mounting Bracket
Accepts ½" EMT, C channel and bar hangers and adjusts 3" vertically from above the ceiling.

Gaskets
Closed cell gaskets achieve restrictive airflow requirements without additional caulking.

Lamp Module
Integral mounting clips facilitate installation from top access or thru the aperture. Locking screws (provided) lock lamp module to the housing. Electrical quick disconnect facilitates field service.

LED Array
Field interchangeable and upgradable light engine provides a uniform source with high efficiency and no pixilation. Available in remote or proximity phosphors in various color temperatures. Select color rendering index (CRI) of 90, 95 or 97 minimum providing excellent color quality. Color accuracy within 2 SDCM.

Primary Reflector
Segmented Miro® upper reflector yields a smooth square beam with uniform distribution. Diffuse glass mixing dome provides shielding to source and excellent color over angle uniformity over rated life.

Lower Splay
Die cast aluminum splay with seamless corners provides cutoff to lens. Available in self-flanged or rimless versions.

Shielding
Glass lens provides additional light control and source shielding. Spring loaded to allow removal when installed rimless.

Trim Retention
Mousetrap type springs pull flange tight to ceiling. Light trap eliminates spill light at edge of flange and reflector.

Junction Box
(7) ½" trade size pry outs, (3) non-metallic cable. Listed for (8) #12 AWG (four in, four out) 90°C conductors and feed thru branch wiring. Wago® quick connects for field wiring.

Driver
Integral 120 or 120-277V 50/60 Hz constant current driver provides noise free operation. Continuous, flicker-free leading or trailing edge phase cut dimming from 100 to 1% with select controls.

Compliance
cULus listed for wet locations. UL1598 wet location labeled, covered ceiling mount only. Restrictive airflow per ASTM E283. EMI/RFI emissions per FCC 47CFR Part 15 class B limits and suitable for residential and commercial use. Contains no mercury or lead and RoHS compliant. Zhaga certified luminaire. Photometric testing in accordance with IES LM79. LED life testing in accordance with LM80.

Warranty
5 year warranty.

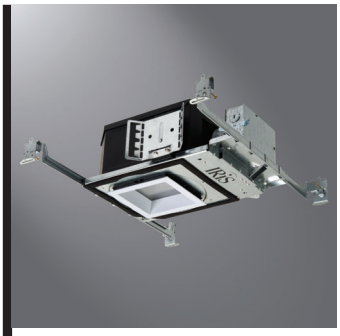

P406TAT MH4LED E4SL

Shallow Lens LED Downlight

4-Inch Square Aperture

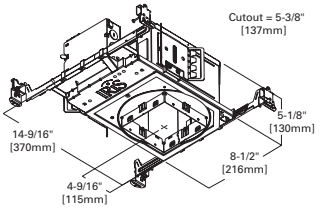

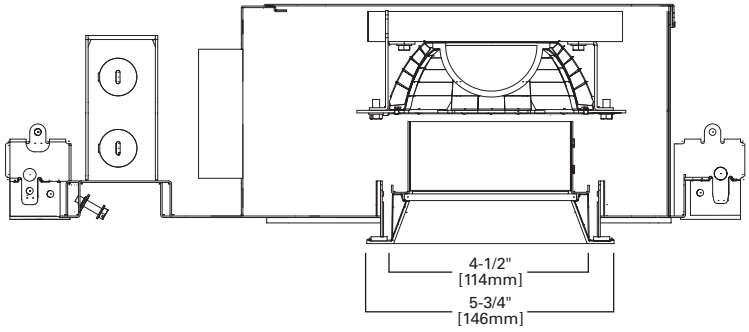

Refer to ENERGY STAR® Qualified Products List. Can be used to comply with California Title 24 High Efficacy requirements. Certified to California Title 20 Appliance Efficiency Database.

Eaton is a founding member of the Zhaga Consortium

Delivered Performace		V927	V930	V935	V940	D927	D930	A927	A930
	CRI (Min)	90	90	90	90	97	97	95	95
	R9 (Min)	50	50	50	50	95	95	90	90
	CCT (K5)	2700	3000	3500	4000	2700	3000	2700	3000
	SDCM	2-Step							
	Life (L70)	50,000 Hours						40,000 Hours*	
	LPW**	46	48	53	60	36	40	36	38
Lumens	**15W**	664	691	759	863	517	570	518	552
Lumens	**20W**	901	937	1030	1170	701	773	703	749
Lumens	**33W**	1471	1501	1582	1874	1080	1190	1420	1515

Performance data based on goniometer measurements with 1ELTE driver option and E4SL2GMW lower shielding reflector.
*Projected lumen maintanence.
**LPW based on 15W and 'E' driver option.

ORDERING INFORMATION

(Order housing platform, lamp module and optical element separately

Housing Platform

P406TAT = 4" square housing platform, non-IC, airtight
P406TCP = 4" square housing platform, non-IC, CCEA listed for City of Chicago plenum requirements

Accessories

RA4X4 = Rimless adapter for 4" housing platforms
EDC4X41 = Extended depth collar for 1" - 1-1/2" thick ceilings

Lamp Module

MH4LED = 4" square LED module

Wattage

15 = 15 Watts
20 = 20 Watts
33 = 33 Watts

Light Engine

V927 = Bridgelux Vero Series, Zhaga certified, 90 CRI min, 2700 K CCT
V930 = Bridgelux Vero Series, Zhaga certified, 90 CRI min, 3000 K CCT
V935 = Bridgelux Vero Series, Zhaga certified, 90 CRI min, 3500 K CCT
V940 = Bridgelux Vero Series, Zhaga certified, 90 CRI min, 4000 K CCT
D927 = Bridgelux Décor Series, Zhaga certified, 97 CRI min, 2700 K CCT
D930 = Bridgelux Décor Series, Zhaga certified, 97 CRI min, 3000 K CCT
A927 = Xicato XTM Artist Series, Zhaga compatible, 95 CRI min, 2700 K CCT
A930 = Xicato XTM Artist Series, Zhaga compatible, 95 CRI min, 3000 K CCT

Driver

E = 120 - 277V 50/60 Hz LE/TE phase cut dimming to 1% (dimming at 120V input only, available in 15 and 20 watt only)
1ELTE = 120V 60 Hz LE phase cut dimming to 1%, Lutron A-Series

Element

E4SL = 4" Shallow Lens Reflector

Media

1G = Prismatic Glass
2G = Diffuse Glass
5G = Opal White Glass

Texture

[Blank] = Smooth

Finish

Painted Finishes
MB = Matte Black
MW = Matte White
W = Gloss White
MMS = Matte Metalic Silver

Flange Style

[Blank] = Self-Flanged
RL = Rimless, Use with Rimless Adapter

Accessories

L4X4HEX = Matte Black Hex Cell Louver
MTR4MW = 4" Metal Trim Ring, Matte White
MTR4MB = 4" Metal Trim Ring, Matte Black
MTR4SN = 4" Metal Trim Ring, Satin Nickel
MTR4TBZ = 4" Metal Trim Ring, Tuscon Bronze

WIRING DIAGRAM

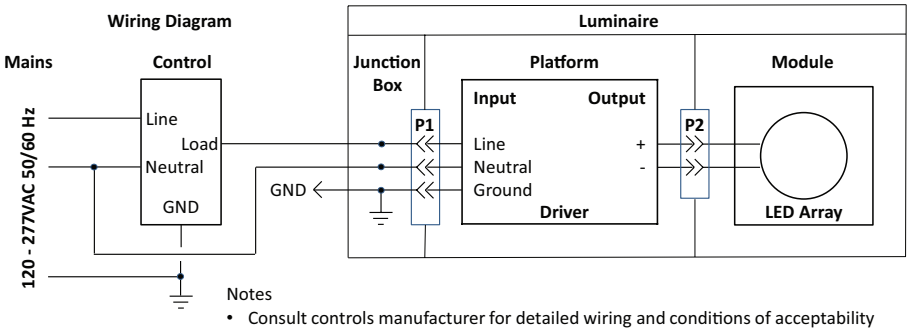

Notes

- Consult controls manufacturer for detailed wiring and conditions of acceptability
- Input voltage contingent on control and driver options selected
- Field wiring to confirm to all national and local codes
- Phase cut dimming at 120V input only.

ENERGY

ENERGY DATA			
E = LE & TE Phase Cut			
Input Voltage		120V	277V
15W	Input Power (W)	14.4	15.4
	Input Current (A)	0.121	0.059
	Inrush (A)	0.16	0.288
20W	Input Power (W)	21.2	21.8
	Input Current (A)	0.178	0.082
	Inrush (A)	0.218	0.403
T Ambient -40 - +40˚C			
Power Factor ≥ 0.90			
Sound Rating Class A			
THD ≤ 20%			

COMPATIBLE CONTROLS

Manufacturer	Series	Model	15W				LE Start Time	20W				LE Start Time
			Minimum Luminaires (per Circuit)	Maximum Luminaires (per Circuit)	Minimum Measured Light Output	Maximum Measured Light Output		Maximum Luminaires (per Circuit)	Minimum Measured Light Output (per Circuit)	Maximum Measured Light Output	Minimum Luminaires	
Lutron	Ariadni	AY-600P	1	37	9%	98%	<1s	1	27	11%	98%	<1s
Lutron	Contour	CT103P	1	62	1%	98%	>1s	1	45	4%	98%	<1s
Lutron	Contour	CT-600P	1	37	1%	98%	>1s	1	27	3%	98%	<1s
Lutron	Rotary	D-600P	1	37	1%	98%	>1s	1	27	3%	98%	>1s
Lutron	Diva	DV-600P	1	37	1%	98%	>1s	1	27	2%	98%	<1s
Lutron	Glyder	GL-600P	1	37	2%	99%	<1s	1	27	7%	98%	<1s
Lutron	Lumia	LG-600PH	1	37	1%	98%	>1s	1	27	1%	98%	>1s
Lutron	Nova	N-600	1	37	0%	99%	>1s	1	27	1%	99%	<1s
Lutron	Skylark	S-600P	1	37	1%	98%	>1s	1	27	1%	98%	>1s
Lutron	Centurion	C-600P	1	37	3%	99%	>1s	1	27	5%	99%	>1s
Lutron	Ariadni	AYLV-600P	1	28	4%	98%	<1s	1	20	9%	98%	<1s
Lutron	Glyder	GLV600	1	28	1%	99%	<1s	1	20	3%	99%	<1s
Lutron	Diva	DVLV-600P	1	28	2%	97%	<1s	1	20	6%	98%	<1s
Lutron	Lumina	LG-103P	1	62	5%	98%	<1s	1	45	10%	98%	<1s
Lutron	Skylark	SLV-600P	1	28	1%	98%	>1s	1	20	3%	98%	>1s
Lutron	Nova	NTLV600	1	28	9%	99%	<1s	1	20	12%	99%	<1s
Lutron	Nova	NT600	1	37	2%	99%	>1s	1	27	4%	99%	>1s

COMPATIBLE CONTROLS

Manufacturer	Series	Model	15W		Minimum Measured Light Output	Maximum Measured Light Output	LE Start Time	20W		Minimum Measured Light Output	Maximum Measured Light Output	LE Start Time
			Minimum Luminaires (per Output)	Maximum Luminaires (per Output)				Minimum Luminaires (per Output)	Maximum Luminaires (per Output)			
Lutron	Maestro	MACL-153M(_)*	1	10	20%	98%	<1s	-	-	-	-	-
Lutron	Maestro Wireless	MRF2-6ND	1	10	20%	99%	>1s	1	7	19%	100%	>1s
Lutron	Maestro Wireless	MRF2-6ELV	-	-	-	-	-	1	7	19%	100%	>1s
Lutron	RadioRA2 1000 W	RRD-10ND	1	10	20%	99%	>1s	1	7	19%	100%	>1s
Lutron	RadioRA2 Adaptive Dimmer	RRD-6NA	-	-	-	-	-	1	7	19%	100%	>1s
Lutron	HomeWorks QS 600 W	HQRD-6ND	1	10	20%	99%	>1s	1	7	19%	100%	>1s
Lutron	HomeWorks QS 1000 W	HQRD-10ND	1	10	20%	99%	>1s	1	7	19%	100%	>1s
Lutron	HomeWorks QS Adaptive Dimmer	HQRD-6NA	-	-	-	-	-	1	7	19%	100%	>1s
Lutron	HomeWorks 600 W Dimmer	HxD-6ND	1	23	19%	99%	>1s	1	15	20%	99%	>1s
Lutron	"Grafik Eye 3000/ HomeWorks"	"Grafik Eye 3000 Family/ HWI-WPM-6D-120"	1	35	20%	98%	>1s	1	22	20%	100%	>1s
Lutron	"Grafik QS/ Wallbox Power Module"	"Grafik Eye QS Main Unit Family/ LQRJ-WPM-6P"	1	35	20%	98%	>1s	1	22	20%	100%	>1s
Lutron	RPM-4U Module (LCP, HomeWorks, GRAFIK Systems, Quantum)	HW-RPM-4U-120, LP-RPM-4U-120	1	86	20%	96%	>1s	1	55	18%	97%	>1s
Lutron	RPM-4A Module (LCP, HomeWorks, GRAFIK Systems, Quantum)	HW-RPM-4A-120, LP-RPM-4A-120	1	53	19%	99%	>1s	1	34	19%	98%	>1s
Lutron	Panel module	GP (Harrier) Card	-	-	-	-	-	1	50	19%	97%	>1s
Lutron	Stanza	SZ-6ND	1	23	19%	99%	>1s	1	15	20%	99%	>1s
Lutron		"PHPM-PA with Grafik Eye QS Main Unit"	1	71	19%	98%	>1s	1	55	20%	99%	>1s
Lutron		"PHPM-WBX with 3-wire fluorescent control"	1	71	19%	98%	>1s	1	55	20%	99%	>1s

COMPATIBLE CONTROLS

Manufacturer	Series	Model	15W		Maximum Measured	Minimum Measured	LE Start Time	20W		Maximum Measured	Minimum Measured	LE Start Time
			Minimum Luminaires (per circuit)	Maximum Luminaires (per circuit)				Minimum Luminaires	Maximum Luminaires			
Vantage	Enclosure Module	SDM12 EM	1	25	96.1%	1.7%	3.4s	1	17	95.9%	0.2%	5s
Vantage	Enclosure Module	EDIMMOD	1	37	98.8%	3.8%	2.4s	1	25	95.8%	4.9%	1.9s
Vantage	ScenePoint	DS / RD	1	8	96.1%	1.7%	3.4s	1	7	95.9%	0.2%	5s
Vantage	RFLC	DRD4	1	8	100%	6.3%	2.3s	1	7	100%	8.4%	1.9s
Crestron	Green Light	GLX-DIM6	--	--	100%	15%	--	--	--	100%	9%	--
Crestron	Green Light	GLXX-2DIM8	--	--	100%	15%	--	--	--	100%	9%	--
Crestron	Green Light	CLS-EXP-DIMU	--	--	100%	8%	--	--	--	100%	11%	--
Crestron	Green Light	DIN-1DIM4	--	--	100%	6%	--	--	--	100%	7%	--
Crestron	Green Light	DIN-1DIMU4	--	--	100%	14%	--	--	--	100%	9%	--
Savant		LMD-4120	--	--	100%	3.5%	<1s	--	--	100%	2.7%	<1s
Savant		LMD-8120	--	--	100%	10.1%	<1s	--	--	100%	10.4%	<1s
Savant		LMD-IN120	--	--	100%	3.5%	<1s	--	--	100%	3.1%	<1s

Manufacturer	Series	Model	15W		Maximum Measured	Minimum Measured	LE Start Time	20W		Maximum Measured	Minimum Measured	LE Start Time
			Minimum Luminaires (per circuit)	Maximum Luminaires (per circuit)				Minimum Luminaires	Maximum Luminaires			
CWD	Ilumen	SC277-06-UN	1	38	100%	13%	<1s	1	28	99.40%	16.58%	<1s
CWD	Aspire	9530AW	1	30	100%	5%	<1s	1	21	100.00%	13.07%	<1s
CWD	Skye	DE06P	1	30	98%	11%	<1s	1	21	96.78%	14.81%	<1s
CWD	Devine	RI061	1	30	99%	21%	>1s	1	21	98.81%	24.23%	>1s
CWD	Devine	TAL06P	1	37	100%	10%	<1s	1	27	99.22%	11.91%	<1s
CWD	Toggle	DAL06P	1	37	100%	4%	<1s	1	27	99.16%	5.66%	<1s
CWD	Skye	SAL06P	1	37	100%	9%	<1s	1	27	99.16%	13.00%	<1s
CWD	Skye	SLC06P	1	37	99%	2%	>1s	1	27	98.27%	1.76%	>1s
CWD	Devine	DLC06P	1	18	99%	2%	>1s	1	13	98.57%	3.09%	<1s
CWD	Toggle	TI061	1	30	97%	5%	<1s	1	21	96.36%	12.58%	<1s
CWD	Smart	AAL06	1	37	99%	10%	<1s	1	27	98.51%	13.33%	<1s

WIRING DIAGRAM

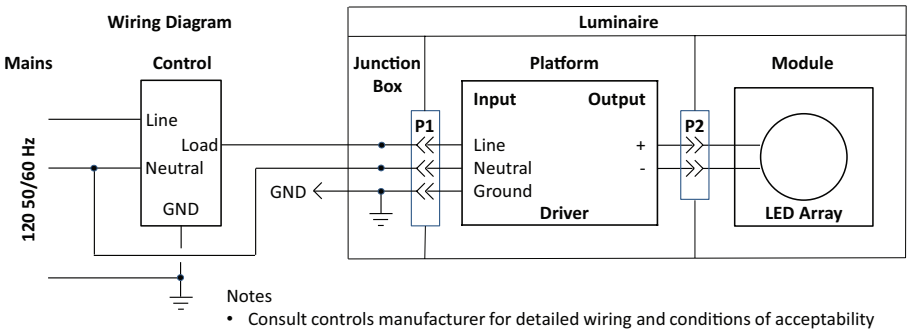

Notes

- Consult controls manufacturer for detailed wiring and conditions of acceptability
- Input voltage contingent on control and driver options selected
- Field wiring to confirm to all national and local codes

ENERGY

ENERGY DATA		
1ELTE = LE Phase Cut		
Input Voltage		120V
15W	Input Power (W)	16.3
	Input Current (A)	0.14
	Inrush (A)	1.128
20W	Input Power (W)	23.2
	Input Current (A)	0.195
	Inrush (A)	1.112
33W	Input Power (W)	33.7
	Input Current (A)	0.283
	Inrush (A)	0.072
T Ambient -40 - +40˚C		
Power Factor ≥ 0.90		
Sound Rating Class A		
THD ≤ 20%		

COMPATIBLE CONTROLS

Manufacturer	Series	Model	15W					20W					33W				
			Minimum Luminaires	Maximum Luminaires	Maximum Measured	Minimum Measured	LE Start Time	Minimum Luminaires	Maximum Luminaires	Maximum Measured	Minimum Measured	LE Start Time	Minimum Luminaires	Maximum Luminaires	Maximum Measured	Minimum Measured	LE Start Time
Lutron	Nova T	NTLV-600-CPN0199	1	8	100%	1%	<1s	1	8	100%	1%	<1s	1	8	100%	1%	<1s
Lutron	Maestro Wireless	MRF2-6ND-120	1	8	100%	1%	<1s	1	8	100%	1%	<1s	1	8	100%	1%	<1s
Lutron	RadioRA2 1000 W	RRD-10ND	1	13	100%	1%	<1s	1	13	100%	1%	<1s	1	13	100%	1%	<1s
Lutron	RadioRA2 Adaptive Dimmer	RRD-6NA	1	8	100%	1%	<1s	1	8	100%	1%	<1s	1	8	100%	1%	<1s
Lutron	RadioRA 600 W	RA-6ND	1	8	100%	1%	<1s	1	8	100%	1%	<1s	1	8	100%	1%	<1s
Lutron	RadioRA 1000 W	RA-10ND	1	13	100%	1%	<1s	1	13	100%	1%	<1s	1	13	100%	1%	<1s
Lutron	HomeWorks QS 600 W	HQRD-6ND	1	8	100%	1%	<1s	1	8	100%	1%	<1s	1	8	100%	1%	<1s
Lutron	HomeWorks QS 1000 W	HQRD-10ND	1	13	100%	1%	<1s	1	13	100%	1%	<1s	1	13	100%	1%	<1s
Lutron	HomeWorks QS Adaptive Dimmer	HQRD-6NA	1	8	100%	1%	<1s	1	8	100%	1%	<1s	1	8	100%	1%	<1s
Lutron	HomeWorks QS WPM	HQRJ-WPM-6D-120	1	10	100%	1%	<1s	1	10	100%	1%	<1s	1	10	100%	1%	<1s
Lutron	HomeWorks 600 W Dimmer	HRD-6ND	1	8	100%	1%	<1s	1	8	100%	1%	<1s	1	8	100%	1%	<1s
Lutron	HomeWorks 1000 W dimmer	HWD-10ND, HRD-10ND	1	8	100%	1%	<1s	1	8	100%	1%	<1s	1	8	100%	1%	<1s
	HomeWorks WPM	HWI-WPM-6D-120	1	10	100%	1%	<1s	1	10	100%	1%	<1s	1	10	100%	1%	<1s
Lutron	GRAFIK Eye QS	QSGR-, QSGRJ-	1	10	100%	1%	<1s	1	10	100%	1%	<1s	1	10	100%	1%	<1s
	GRAFIK Eye 3000	GRX-3100, GRX-3500	1	10	100%	1%	<1s	1	10	100%	1%	<1s	1	10	100%	1%	<1s
Lutron	RPM-4U Module (LCP, HomeWorks,	HW-RPM-4U-120,	1	26	100%	1%	<1s	1	26	100%	1%	<1s	1	26	100%	1%	<1s
	GRAFIK Systems, Quantum)	LP-RPM-4U-120															
Lutron	RPM-4A Module (LCP, HomeWorks,	HW-RPM-4A-120,	1	13	100%	1%	<1s	1	13	100%	1%	<1s	1	13	100%	1%	<1s
	GRAFIK Systems, Quantum)	LP-RPM-4A-120															
Lutron	GP Panels	Various	1	26	100%	1%	<1s	1	26	100%	1%	<1s	1	26	100%	1%	<1s
Lutron	Stanza	SZ-6ND	1	8	100%	1%	<1s	1	8	100%	1%	<1s	1	8	100%	1%	<1s
Lutron	"Ariadni® C•L® 250 W dimmer"	AYCL-253P-	1	8	100%	1%	<1s	1	8	100%	1%	<1s	1	8	100%	1%	<1s
Lutron	"Diva® C•L® 250 W dimmer"	DVCL-253P- S	1	8	100%	1%	<1s	1	8	100%	1%	<1s	1	8	100%	1%	<1s
		DVSCCL-253P	1	8	100%	1%	<1s	1	8	100%	1%	<1s	1	8	100%	1%	<1s

COMPATIBLE CONTROLS

Manufacturer	Series	Model	15W					20W					33W				
			Minimum Luminaires	Maximum Luminaires	Maximum Measured	Minimum Measured	LE Start Time	Minimum Luminaires	Maximum Luminaires	Maximum Measured	Minimum Measured	LE Start Time	Minimum Luminaires	Maximum Luminaires	Maximum Measured	Minimum Measured	LE Start Time
Vantage	Enclosure Module	SDM12 EM	1	21	95.1%	1.0%	1.90s	1	17	95.3%	1.0%	1.70s	1	17	98.7%	1.1%	1.7s
Vantage	Enclosure Module	EDIMMOD	1	31	95.8%	0.9%	1.90s	1	25	96.2%	1.0%	1.80s	1	30	95.8%	1.1%	2.2s
Vantage	ScenePoint	DS / RD	1	7	95.1%	1.0%	1.90s	1	4	95.3%	1.0%	1.70s	1	7	98.7%	1.1%	1.7s
Crestron	Green Light	GLX-DIM6	--	--	100%	1%	--	--	--	100%	1%	--	--	--	100%	1%	--
Crestron	Green Light	CLX-2DIM8	--	--	100%	1%	--	--	--	100%	1%	--	--	--	100%	1%	--
Crestron	Green Light	GLXX-2DIM8	--	--	100%	1%	--	--	--	100%	1%	--	--	--	100%	1%	--
Crestron	Green Light	CLS-EXP-DIM	--	--	100%	1%	--	--	--	100%	1%	--	--	--	100%	1%	--
Crestron	Green Light	CLS-C6	--	--	100%	1%	--	--	--	100%	1%	--	--	--	100%	1%	--
Crestron	Green Light	CLW-DIMEX	--	--	100%	1%	--	--	--	100%	1%	--	--	--	100%	1%	--
Crestron	Green Light	CLX-1DELV4	--	--	100%	1%	--	--	--	100%	1%	--	--	--	100%	1%	--
Crestron	Green Light	DIN-1DIMU4	--	--	100%	1%	--	--	--	100%	1%	--	--	--	100%	1%	--
Cooper Control	ilumin	SC277-06-UN-1P	1	38	99%	0%	>1s	1	28	99%	0%	<1s	1	17	100	1%	<1s
Savant	--	LMD-8120	--	--	100%	3.0%	<1s	--	--	100%	3.0%	<1s	--	--	100%	2%	<1s
Savant	--	LMD-IN120	--	--	100%	4.0%	<1s	--	--	100%	4.0%	<1s	--	--	100%	2%	<1s
Savant	--	WCD-101xx	--	--	100%	3%	<1s	--	--	100%	0.03	<1s	--	--	1	2%	<1s

FINISH MULTIPLIERS

	MB	MW	W	MMS
[Blank] = Smooth	0.73	1.00	1.00	0.87

LIGHTING FACTS

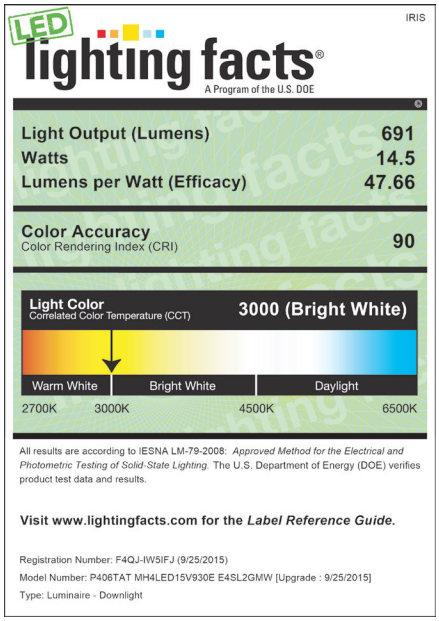

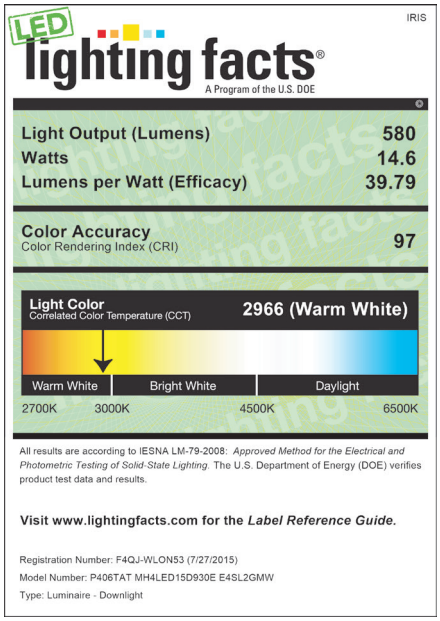

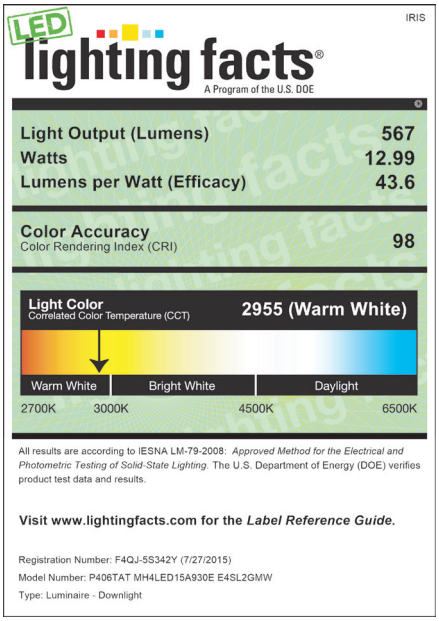

PHOTOMETRICS

Test Number	P128209
Platform	P406TAT
Element	MH4LED15V930E E4SL2GMW
Lumens	691
Efficacy	48 Lm/W
SC	1.06

CANDLEPOWER DISTRIBUTION

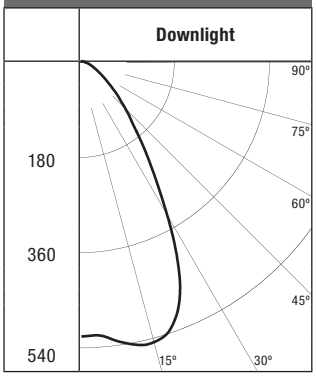

CONE OF LIGHT

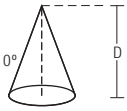

D	FC	L	W
5.5'	16.9	5.8	5.8
7'	10.4	7.4	7.4
8'	8	8.4	8.4
9'	6.3	9.4	9.4
10'	5.1	10.4	10.6
12'	3.6	12.6	12.6

CANDELA TABLE

Degrees Vertical	Candela
0	512
5	514
15	540
25	439
35	220
45	107
55	50
65	23
75	8
85	2
90	0

ZONAL LUMEN SUMMARY

Zone	Lumens	%Fixture
0-30	390	56.5
0-40	528	76.5
0-60	655	94.8
0-90	691	100.0
90-180	0	0
0-180	691	100.0

COEFFICIENTS OF UTILIZATION

Ceiling	80%				70%			50%	
Wall %	70	50	30	10	50	30	10	50	10
RCR	Zonal cavity method -- floor reflectance = 20%								
0	119	119	119	119	116	116	116	111	111
1	112	109	106	103	107	104	102	103	98
2	105	99	95	90	98	93	89	94	87
3	99	91	85	80	90	84	80	87	78
4	93	84	77	72	83	76	72	80	71
5	87	77	70	65	76	70	65	74	64
6	82	72	65	60	71	64	59	69	59
7	77	67	60	55	66	59	55	64	54
8	73	62	55	51	61	55	50	60	50
9	69	58	51	47	58	51	47	57	47
10	65	54	48	44	54	48	44	53	43

Test Number	P128201
Platform	P406TAT
Element	MH4LED20V930E E4SL2GMW
Lumens	937
Efficacy	44 Lm/W
SC	1.06

CANDLEPOWER DISTRIBUTION

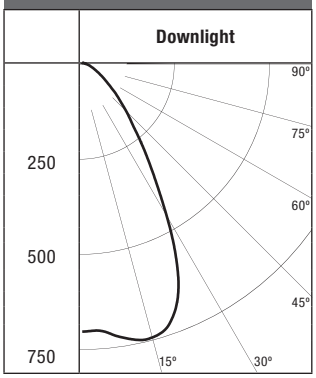

CONE OF LIGHT

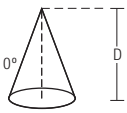

D	FC	L	W
5.5'	22.9	5.8	5.8
7'	14.2	7.4	7.4
8'	10.8	8.4	8.4
9'	8.6	9.4	9.4
10'	6.9	10.4	10.6
12'	4.8	12.6	12.6

CANDELA TABLE

Degrees Vertical	Candela
0	694
5	697
15	732
25	595
35	298
45	145
55	68
65	32
75	11
85	2
90	0

ZONAL LUMEN SUMMARY

Zone	Lumens	%Fixture
0-30	529	56.5
0-40	717	76.5
0-60	888	94.8
0-90	937	100.0
90-180	0	0
0-180	937	100.0

COEFFICIENTS OF UTILIZATION

Ceiling	80%				70%			50%	
Wall %	70	50	30	10	50	30	10	50	10
RCR	Zonal cavity method -- floor reflectance = 20%								
0	119	119	119	119	116	116	116	111	111
1	112	109	106	103	107	104	102	103	98
2	105	99	95	90	98	93	89	94	87
3	99	91	85	80	90	84	80	87	78
4	93	84	77	72	83	76	72	80	71
5	87	77	70	65	76	70	65	74	64
6	82	72	65	60	71	64	59	69	59
7	77	67	60	55	66	59	55	64	54
8	73	62	55	51	61	55	50	60	50
9	69	58	51	47	58	51	47	57	47
10	65	54	48	44	54	48	44	53	43

PHOTOMETRICS

Test Number	P167996
Platform	P406TAT
Element	MH4LED33V9301ELTE E4SL2GMW
Lumens	1500
Efficacy	40.9 Lm/W
SC	1.06

CANDLEPOWER DISTRIBUTION

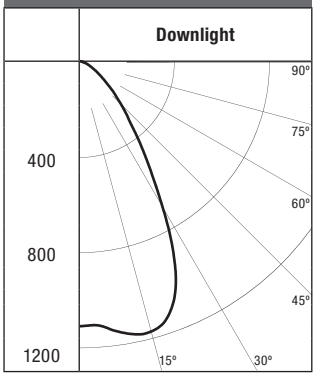

CONE OF LIGHT

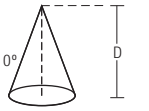

D	FC	L	W
5.5'	36.8	5.8	5.8
7'	22.7	7.4	7.4
8'	17.4	8.4	8.4
9'	13.7	9.4	9.4
10'	11.1	10.4	10.6
12'	7.7	12.6	12.6

CANDELA TABLE

Degrees Vertical	Candela
0	1112
5	1116
15	1172
25	953
35	477
45	232
55	110
65	51
75	18
85	3
90	0

ZONAL LUMEN SUMMARY

Zone	Lumens	%Fixture
0-30	847	56.5
0-40	1148	76.5
0-60	1423	94.8
0-90	1500	100
90-180	0	0
0-180	1500	100

COEFFICIENTS OF UTILIZATION

Ceiling	80%				70%			50%	
Wall %	70	50	30	10	50	30	10	50	10
RCR	Zonal cavity method -- floor reflectance = 20%								
0	119	119	119	119	116	116	116	111	111
1	112	109	106	103	107	104	102	103	98
2	105	99	95	90	98	93	89	94	87
3	99	91	85	80	90	84	80	87	78
4	93	84	77	72	83	76	72	80	71
5	87	77	70	65	76	70	65	74	64
6	82	72	65	60	71	64	59	69	59
7	77	67	60	55	66	59	55	64	54
8	73	62	55	51	61	55	50	60	50
9	69	58	51	47	58	51	47	57	47
10	65	54	48	44	54	48	44	53	43

Test Number	P128210
Platform	P406TAT
Element	MH4LED15D930E E4SL2GMW
Lumens	570
Efficacy	39.6 Lm/W
SC	1.06

CANDLEPOWER DISTRIBUTION

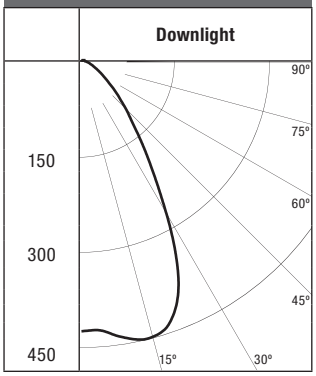

CONE OF LIGHT

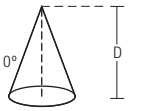

D	FC	L	W
5.5'	14	5.8	5.8
7'	8.6	7.4	7.4
8'	6.6	8.4	8.4
9'	5.2	9.4	9.4
10'	4.2	10.4	10.6
12'	2.9	12.6	12.6

CANDELA TABLE

Degrees Vertical	Candela
0	422
5	424
15	445
25	362
35	181
45	88
55	42
65	19
75	7
85	1
90	0

ZONAL LUMEN SUMMARY

Zone	Lumens	%Fixture
0-30	322	56.5
0-40	436	76.5
0-60	540	94.8
0-90	570	100.0
90-180	0	0
0-180	570	100.0

COEFFICIENTS OF UTILIZATION

Ceiling	80%				70%			50%	
Wall %	70	50	30	10	50	30	10	50	10
RCR	Zonal cavity method -- floor reflectance = 20%								
0	119	119	119	119	116	116	116	111	111
1	112	109	106	103	107	104	102	103	98
2	105	99	95	90	98	93	89	94	87
3	99	91	85	80	90	84	80	87	78
4	93	84	77	72	83	76	72	80	71
5	87	77	70	65	76	70	65	74	64
6	82	72	65	60	71	64	59	69	59
7	77	67	60	55	66	59	55	64	54
8	73	62	55	51	61	55	50	60	50
9	69	58	51	47	58	51	47	57	47
10	65	54	48	44	54	48	44	53	43

PHOTOMETRICS

Test Number	P128202
Platform	P406TAT
Element	MH4LED20D930E E4SL2GMW
Lumens	773
Efficacy	36.3 Lm/W
SC	1.06

CANDLEPOWER DISTRIBUTION

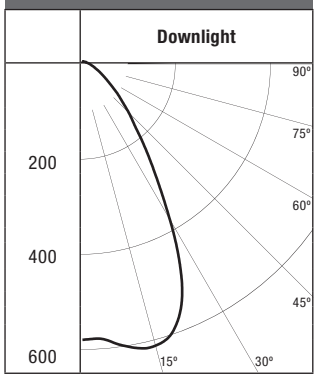

CONE OF LIGHT

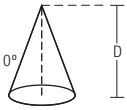

D	FC	L	W
5.5'	18.9	5.8	5.8
7'	11.7	7.4	7.4
8'	8.9	8.4	8.4
9'	7.1	9.4	9.4
10'	5.7	10.4	10.6
12'	4	12.6	12.6

CANDELA TABLE

Degrees Vertical	Candela
0	572
5	575
15	604
25	490
35	246
45	120
55	56
65	26
75	9
85	2
90	0

ZONAL LUMEN SUMMARY

Zone	Lumens	%Fixture
0-30	436	56.5
0-40	591	76.5
0-60	733	94.8
0-90	773	100.0
90-180	0	0
0-180	773	100.0

COEFFICIENTS OF UTILIZATION

Ceiling	80%				70%			50%	
Wall %	70	50	30	10	50	30	10	50	10
RCR	Zonal cavity method -- floor reflectance = 20%								
0	119	119	119	119	116	116	116	111	111
1	112	109	106	103	107	104	102	103	98
2	105	99	95	90	98	93	89	94	87
3	99	91	85	80	90	84	80	87	78
4	93	84	77	72	83	76	72	80	71
5	87	77	70	65	76	70	65	74	64
6	82	72	65	60	71	64	59	69	59
7	77	67	60	55	66	59	55	64	54
8	73	62	55	51	61	55	50	60	50
9	69	58	51	47	58	51	47	57	47
10	65	54	48	44	54	48	44	53	43

Test Number	P168000
Platform	P406TAT
Element	MH4LED33D9301ELTE E4SL2GMW
Lumens	977
Efficacy	32.4 Lm/W
SC	1.06

CANDLEPOWER DISTRIBUTION

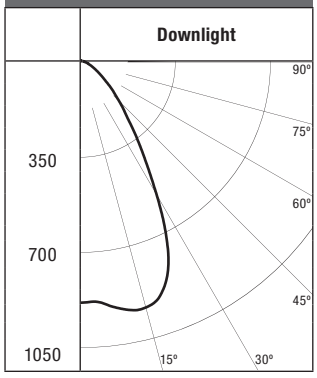

CONE OF LIGHT

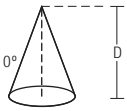

D	FC	L	W
5.5'	29.1	5.8	5.8
7'	18	7.4	7.4
8'	13.8	8.4	8.4
9'	10.9	9.4	9.4
10'	8.8	10.4	10.6
12'	6.1	12.6	12.6

CANDELA TABLE

Degrees Vertical	Candela
0	882
5	885
15	929
25	755
35	378
45	184
55	87
65	40
75	14
85	2
90	0

ZONAL LUMEN SUMMARY

Zone	Lumens	%Fixture
0-30	672	56.5
0-40	910	76.5
0-60	1128	94.8
0-90	1190	100
90-180	0	0
0-180	1190	100

COEFFICIENTS OF UTILIZATION

Ceiling	80%				70%			50%	
Wall %	70	50	30	10	50	30	10	50	10
RCR	Zonal cavity method -- floor reflectance = 20%								
0	119	119	119	119	116	116	116	111	111
1	112	109	106	103	107	104	102	103	98
2	105	99	95	90	98	93	89	94	87
3	99	91	85	80	90	84	80	87	78
4	93	84	77	72	83	76	72	80	71
5	87	77	70	65	76	70	65	74	64
6	82	72	65	60	71	64	59	69	59
7	77	67	60	55	66	59	55	64	54
8	73	62	55	51	61	55	50	60	50
9	69	58	51	47	58	51	47	57	47
10	65	54	48	44	54	48	44	53	43

Appendix 05

landscapeforms®

austin™

Austin blends modernist inspiration into a new interpretation that's as timely as today.

Very Very Contemporary

The Austin Bench, designed by landscape architect Robert Chipman, is a study in beautiful balance. Inspired by architecture of the 20s and classic modern furniture of the 50s, it expresses familiar themes in thoroughly contemporary terms. Austin balances lightness and substance, is relaxed, yet refined, poised but never boring. The cantilever version is a natural for minimalist spaces, the four-legged version a fine fit within a range of architectural styles. Composed of minimal parts, (just two extrusions create the seat and back in all versions) Austin masters the details, from its tapered slats to the lovely winged shape of its end piece. In aluminum or wood Austin is a high-design solution — and a breath of fresh air — for corporate and healthcare courtyards, atria, small-scale public places, and private retail space.

Sense of Place

We believe in the power of design and its ability to elevate public spaces. Landscape Forms provides great design, integrated product collections, and leading edge technology for creating a sense of place in outdoor environments.

Austin™ Specifications

Seat

Austin benches are available in backed or backless, and in a selection of interior and exterior woods, as well as aluminum extruded boards. Unique cantilever style or freestanding/surface mount supports are cast iron.

Cantilever		Freestanding/Surface Mount		
backed	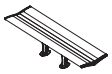 backless	backed	backless	
24" x 33" x 72"	**22" x 18" x 72"**	**24" x 33" x 72"**	**22" x 18" x 72"**	d x h x l

Arm Options

Optional arms may be added to both ends, as well as the center position. Arms are available for either backed or backless benches. All arms are cast aluminum and attached to the seat boards.

center position

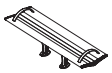
end arms

Mounting Options

Austin benches with freestanding/surface mount supports ship with glides which may be removed for surface mounting. All cantilever supports must be surface mounted into concrete.

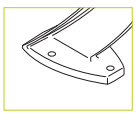
cantilever surface mount

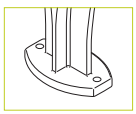
surface mount

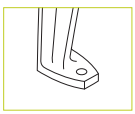
freestanding

Austin may be specified with FSC Certified woods; call for pricing and lead times. Powdercoat finish on metal parts contains no heavy metals, is HAPS-free and has extremely low VOCs. Bench materials are 100% recyclable.

Finishes

Interior woods are finished with Landscape Forms' exclusive LF-80 wood finish, a clear, catalyzed acrylic lacquer. Special stain may be specified for an upcharge.

Exterior woods are unfinished and will weather to a soft pewter gray, requiring no future maintenance.

Metal is finished with Landscape Forms' proprietary Pangard II® polyester powercoat, a hard yet flexible finish that resists rusting, chipping, peering and fading. Call for standard color chart. A wide array of optional colors may be specified for an upcharge.

To Specify

Select the Austin bench in backed or backless option. Specify surface mount cantilever or freestanding/surface mount support. Specify wood type and/or powdercoat color. Specify number of arms. Benches may be specified in FSC certified woods. Visit landscapeforms.com; click Design Tools, Materials/Colors link for standard offerings, including FSC wood options.

www.landscapeforms.com
Download product photos, brochures, color charts, SketchUp components, technical information, CAD details, CSI specifications, assembly instructions.

Austin is designed by Robert Chipman, ASLA.
Specifications are subject to change without notice.
Austin is manufactured in U.S.A.
Austin design is protected by U.S. Patent Nos.
D481,210, D481,211, D482,885, D483,960.
Austin meets BIFMA performance and safety standards.
Location photography: Lady Bird Johnson Wildflower Center, Austin, TX
Landscape Forms supports the LAF at the Second Century level.
©2014 Landscape Forms, Inc. Printed in U.S.A.

landscapeforms®
800.521.2546 269.381.3455 fax
431 Lawndale Avenue, Kalamazoo, MI 49048
www.landscapeforms.com

landscapeforms®

AUSTIN

Product Data Sheet

Austin blends modernist inspiration into a new interpretation that's as timely as today. The Austin Bench, designed by landscape architect Robert Chipman, is a study in beautiful balance. Inspired by architecture of the 20s and classic modern furniture of the 50s, it expresses familiar themes in thoroughly contemporary terms. Austin balances lightness and substance, is relaxed, yet refined, poised but never boring. The cantilever version is a natural for minimalist spaces, the four-legged version a fine fit within a range of architectural styles. Composed of minimal parts, (just two extrusions create the seat and back in all versions) Austin masters the details, from its tapered slats to the lovely winged shape of its end piece. In aluminum or wood Austin is a high-design solution — and a breath of fresh air — for corporate and healthcare courtyards, atria, small-scale public places, and private retail space.

Seat

- Austin benches are available in backed or backless, and in a selection of interior and exterior woods, as well as aluminum extruded boards.
- Unique cantilever style or freestanding/surface mount supports are cast iron.

	STYLE	DEPTH	WIDTH	HEIGHT	PRODUCT WEIGHT
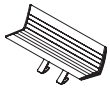	cantilever backed	23"	72"	33"	Alum: 118 lb Wood: 150 lb
	cantilever backed	22"	72"	18"	Alum: 68 lb Wood: 120 lb
	Freestanding/ Surface Mount backed	24"	72"	33"	Alum: 100 lb Wood: 130 lb
	Freestanding/ Surface Mount backless	22"	72"	18"	Alum: 66 lb Wood: 90 lb

Arm Options

- Optional arms may be added to both ends, as well as the center position.
- Arms are available for either backed or backless benches.
- All arms are cast aluminum and attached to the seat boards.

Arm Options	
end and center position	end arms

Mounting Options

- Austin benches with freestanding/surface mount supports ship with glides which may be removed for surface mounting.
- All cantilever supports must be surface mounted into concrete.

Mounting Options		
cantilever backed	cantilever backless	freestanding / surface mount
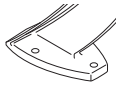		

Landscape Forms, Inc. | 800.521.2546 | F 269.381.3455 | 7800 E. Michigan Ave., Kalamazoo, MI 49048

landscapeforms®

AUSTIN

Product Data Sheet

Litter Receptacles

- Top and side opening litters are available with or without lock.
- With a 34 gallon capacity, litter can be freestanding or surface mount.
- Fabricated with carbon steel body panels, cast aluminum top, and cast iron base.
- Litter is finished with exclusive Pangard II® powdercoat finish.
- Black polyethylene liner comes standard with litter.
- Shipped with freestanding glides that remain in place for surface mounting.
- Litter ships fully assembled.

	STYLE	DIAMETER	HEIGHT	PRODUCT WEIGHT
	Top-Opening	24"	35"	172 lb
	Side-Opening	24"	42"	186 lb

Finishes

- All metal is finished with Landscape Forms' proprietary Pangard II® polyester powdercoat, a hard yet flexible finish that resists rusting, chipping, peeling, and fading.
- Call for standard color chart.

To Specify

- Select top or side-opening litter. Specify with or without lock.
- Select powdercoat color.

Designed by Robert Chipman, ASLA
Austin design is protected by U.S. Patent Nos. D481,210, D481,211, D482,885, D483,960

Visit our landscapeforms.com for more information. Specifications are subject to change without notice.
Landscape Forms supports the Landscape Architecture Foundation at the Second Century level.
©2015 Landscape Forms, Inc. Printed in U.S.A.

Landscape Forms, Inc. | 800.521.2546 | F 269.381.3455 | 7800 E. Michigan Ave., Kalamazoo, MI 49048

TRIO™ BENCH

PRODUCT DATA

The **Trio Bench** blends an evocative sculptural form with materials and construction durable enough for the most challenging outdoor environments. The frame is expertly crafted from rustproof solid cast aluminum. Seat slats can be specified in extruded aluminum or FSC® 100% Ipé hardwood. Available in backed and backless versions, Trio's beautiful design and diverse range of material and configuration options make it ideal for parks, streetscapes, bus stops, campuses or any landscape setting. The Trio family also includes a bike rack, bollard and pedestrian lighting, table ensemble, and the Dispatch Litter & Recycling Receptacle.

MATERIAL & CONSTRUCTION DETAILS

INSTALLATION & MAINTENANCE

FRAME	SLATS	ARMRESTS	INSTALLATION	MAINTENANCE
• Frame is made of solid cast aluminum with powdercoat finish. • See the Forms+Surfaces Powdercoat Chart for details. Custom RAL colors are available for an upcharge. • Due to the inherent nature of metal castings, gloss powdercoats are not offered for cast components.	• Extruded aluminum slats feature a lightly grooved surface for enhanced appearance and non-slip feel. Standard finishes are Clear Anodized and powdercoat. See the Forms+Surfaces Powdercoat Chart for details. Custom RAL colors are available for an upcharge. • Ipé hardwood slats offer superior resistance to moisture, insects, fire, vandalism and decay. All Trio wood is FSC® 100% and has a natural oiled finish that enhances the wood's rich color. (FSC License Code: FSC-C004453)	• All benches have two armrests that are integral parts of the frame end castings. • Optional intermediate armrests are available for an upcharge for both backed and backless benches and may be specified at any desired location along the bench's length. Intermediate armrests are powdercoated to match the frame.	• Trio benches must be surface mounted. Anchors and stainless steel mounting screws are included.	• Metal surfaces can be cleaned as needed using a soft cloth or brush with warm water and a mild detergent. Avoid abrasive cleaners. • Ipé hardwood slats can be maintained by re-oiling as needed with Penofin® hardwood finish or similar products.

NOMINAL DIMENSIONS

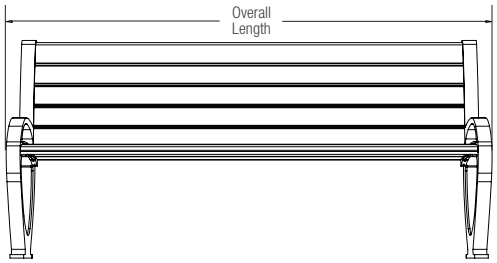

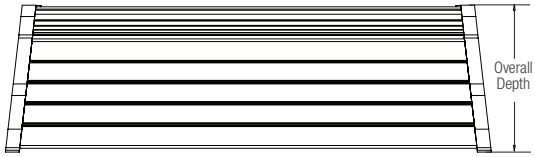

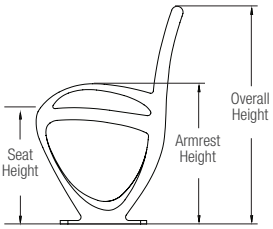

MODEL	OVERALL LENGTH	OVERALL DEPTH	SEAT DEPTH	OVERALL HEIGHT	SEAT HEIGHT	ARMREST HEIGHT	WEIGHT
SBTRO-72BA	75.0" (1905 mm)	22.7" (577 mm)	17.4" (441 mm)	33.6" (853 mm)	17.6" (447 mm)	21.6" (549 mm)	166.7 lbs (75.6 kg)
SBTRO-72BW	75.0" (1905 mm)	22.7" (577 mm)	17.4" (441 mm)	33.6" (853 mm)	17.6" (447 mm)	21.6" (549 mm)	166.7 lbs (75.6 kg)
SBTRO-96BA	98.7" (2506 mm)	22.7" (577 mm)	17.4" (441 mm)	33.6" (853 mm)	17.6" (447 mm)	21.6" (549 mm)	203.4 lbs (92.3 kg)

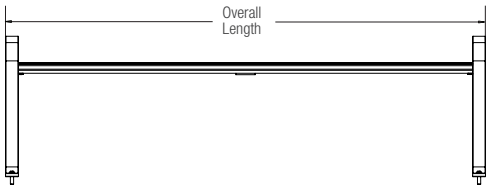

MODEL	OVERALL LENGTH	OVERALL DEPTH	SEAT DEPTH	OVERALL HEIGHT	SEAT HEIGHT	ARMREST HEIGHT	WEIGHT
SBTRO-72NA	74.8" (1900 mm)	20.1" (511 mm)	18" (457 mm)	21.9" (556 mm)	17.7" (450 mm)	21.9" (556 mm)	109.6 lbs (49.7 kg)
SBTRO-72NW	74.8" (1900 mm)	20.1" (511 mm)	18" (457 mm)	21.9" (556 mm)	17.7" (450 mm)	21.9" (556 mm)	109.0 lbs (49.4 kg)
SBTRO-96NA	98.6" (2505 mm)	20.1" (511 mm)	18" (457 mm)	21.9" (556 mm)	17.7" (450 mm)	21.9" (556 mm)	128.4 lbs (58.3 kg)

NOTE: Each intermediate armrest adds 3.5 lbs to the backed Trio Bench, or 4.0 lbs to the backless Trio Bench.

© 2016 Forms+Surfaces® | All dimensions are nominal. Specifications and pricing subject to change without notice. For the most current version of this document, please refer to our website at www.forms-surfaces.com.

ENVIRONMENTAL CONSIDERATIONS

- Please refer to the Trio Bench Environmental Data Sheet for detailed environmental impact information.
- Trio aluminum castings have up to 95% recycled content and are fully recyclable.
- All Trio wood is FSC® 100%.
- Standard powdercoat finishes are no-VOC; non-standard powdercoat finishes are no- or low-VOC, depending on color.
- Low maintenance.
- Easy to disassemble.

NET PRICING AND ORDERING INFORMATION (pricing does not include freight)

MODEL	DESCRIPTION	NET PRICE (US $)
SBTRO-72BA	Trio Bench, 6 foot, backed, extruded aluminum slats	$2,083
SBTRO-72BW	Trio Bench, 6 foot, backed, FSC 100% Ipé hardwood slats	$2,243
SBTRO-72NA	Trio Bench, 6 foot, backless, extruded aluminum slats	$1,613
SBTRO-72NW	Trio Bench, 6 foot, backless, FSC 100% Ipé hardwood slats	$1,783
SBTRO-96BA	Trio Bench, 8 foot, backed, extruded aluminum slats	$2,343
SBTRO-96NA	Trio Bench, 8 foot, backless, extruded aluminum slats	$1,703
	Intermediate armrest for backed or backless Trio Bench	+ $95 per armrest
	Optional Premium Texture from Forms+Surfaces Powdercoat Chart	+ $200 per color/per order
	Custom RAL powdercoat color	please call for pricing

TO ORDER SPECIFY: quantity, model, powdercoat color for frame castings, clear anodized or powdercoat color for aluminum slats, number, and location of intermediate armrests.

LEAD TIME: 6 to 8 weeks. Shorter lead times may be available upon request. Please contact us to discuss your specific timing requirements.

© 2016 Forms+Surfaces® | All dimensions are nominal. Specifications and pricing subject to change without notice. For the most current version of this document, please refer to our website at www.forms-surfaces.com.

Pebble Stool

Design by Surya Graf

Pebble is a simple, whimsical yet inherently practical stool for any installation. Cast in Tournesol's lightweight GFRC concrete, it is durable, natural, yet surprisingly comfortable!

The seat top is slightly domed to prevent water from building up on the top. An optional internal bracket system (similar to our other GFRC benches) allows the Pebble to be anchored if required.

Street & Garden Furniture Co. classic

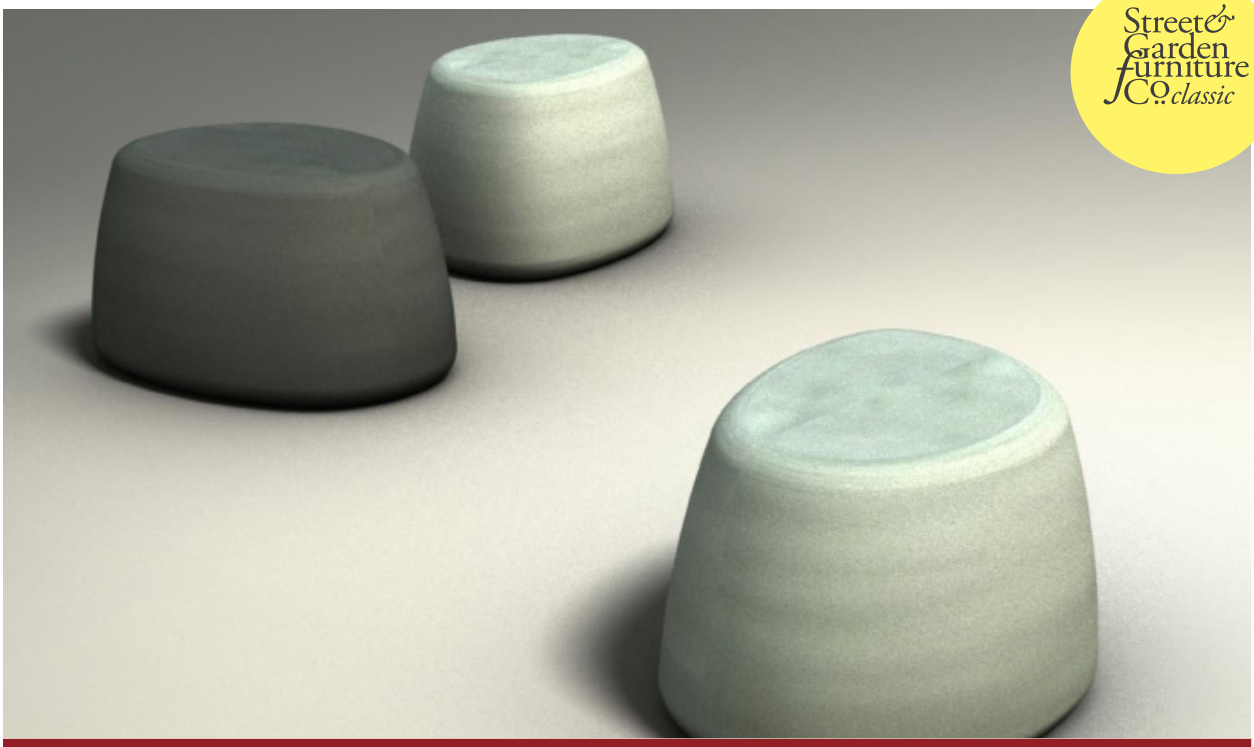

- **Simple, solid, comfortable**
- **Available with concealed brackets for permanent mounting.**

Specifications

Part No.	Description	Size	Colors	Weight
YC-01	Small Pebble Stool, GFRC Concrete.	29.5"L x 24.6"W x 18"H	Natural Concrete or Tournesol GFRC colors.	150 lbs.
YC-02	Medium Pebble Stool, GFRC Concrete	41"L x 29.5"W x 17.75"H	Natural Concrete or Tournesol GFRC colors	200 lbs.
YC-03	Large Pebble Stool, GFRC Concrete	71"L x 29.5"W x 17.75"H	Natural Concrete or Tournesol GFRC colors	300 lbs.

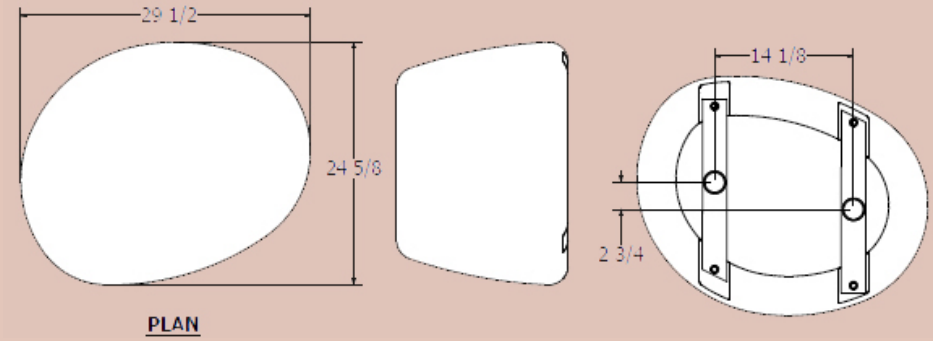

Tournesol SITEWORKS

tournesolsiteworks.com
800.542.2282

Y716
©2016,
Tournesol Siteworks

TWIG Bench

Designed by Alexander Lotersztain in 2007.

TWIG is a highly configurable modular seating system which promotes social interaction and a casual life-style. Currently available in lightweight GFRC Concrete, the possibilities are limited only by your imagination.

Part of a successful collaboration of Street & Garden Furniture and Derlot Editions, TWIG is already a best seller in Australia and throughout Europe. Tournesol Siteworks has been manufacturing TWIG in lightweight concrete in California since 2011.

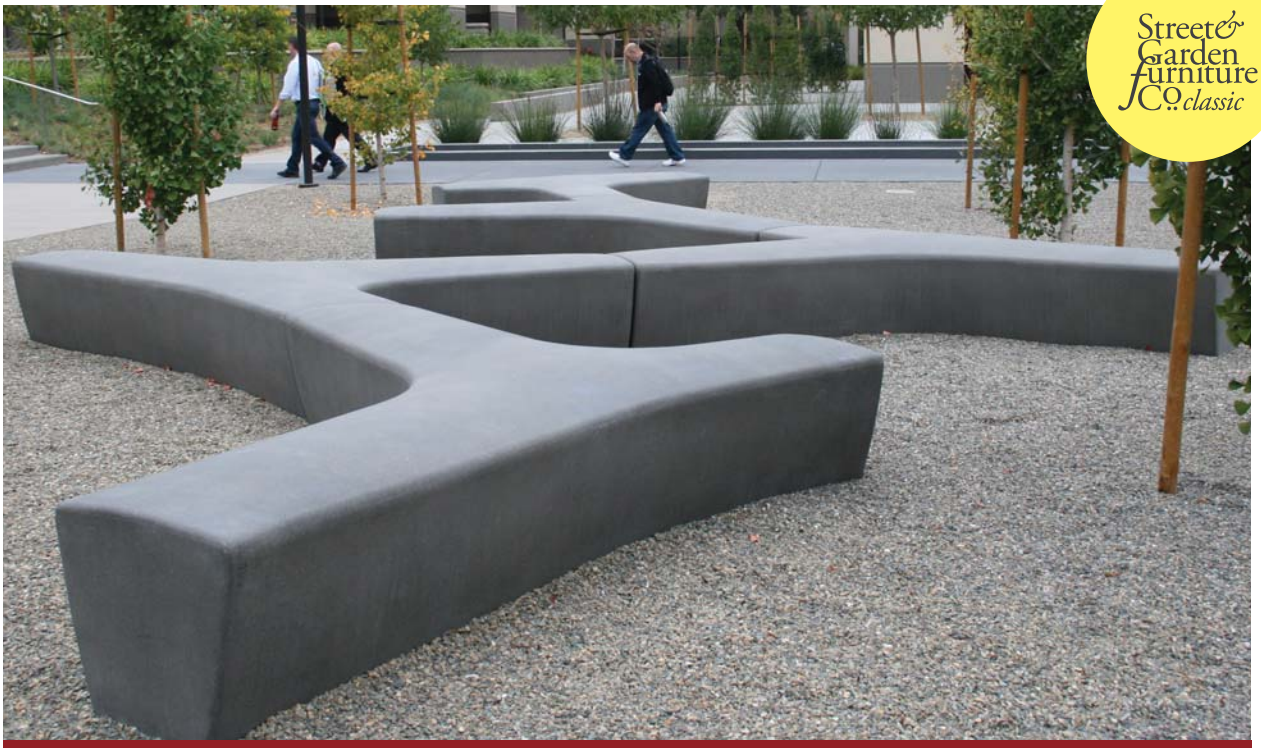

- **Highly configurable.**
- **Provides seating for up to 4 - 5 people.**
- **Available with stainless steel skate stops.**
- **Available with either external or concealed mounts.**

External mount bracket allows for direct adjustable anchoring.

Concealed mount bracket keeps the bench in place with epoxy anchors. Template available for installation.

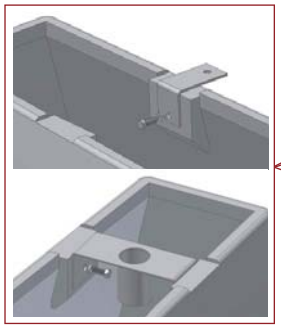

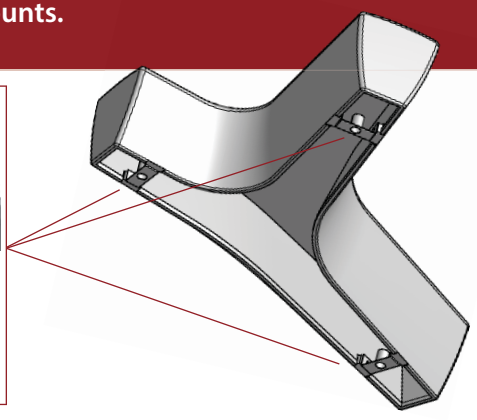

Tournesol SITEWORKS

tournesolsiteworks.com
800.542.2282

G314
©2014,
Tournesol Siteworks

Specifications

Part No.	Description	Size	Colors	Weight
G-01	TWIG Bench, GFRC Concrete.	96" x 89", Seat 18" x 18"	Natural Concrete or Tournesol GFRC colors.	700 lbs.

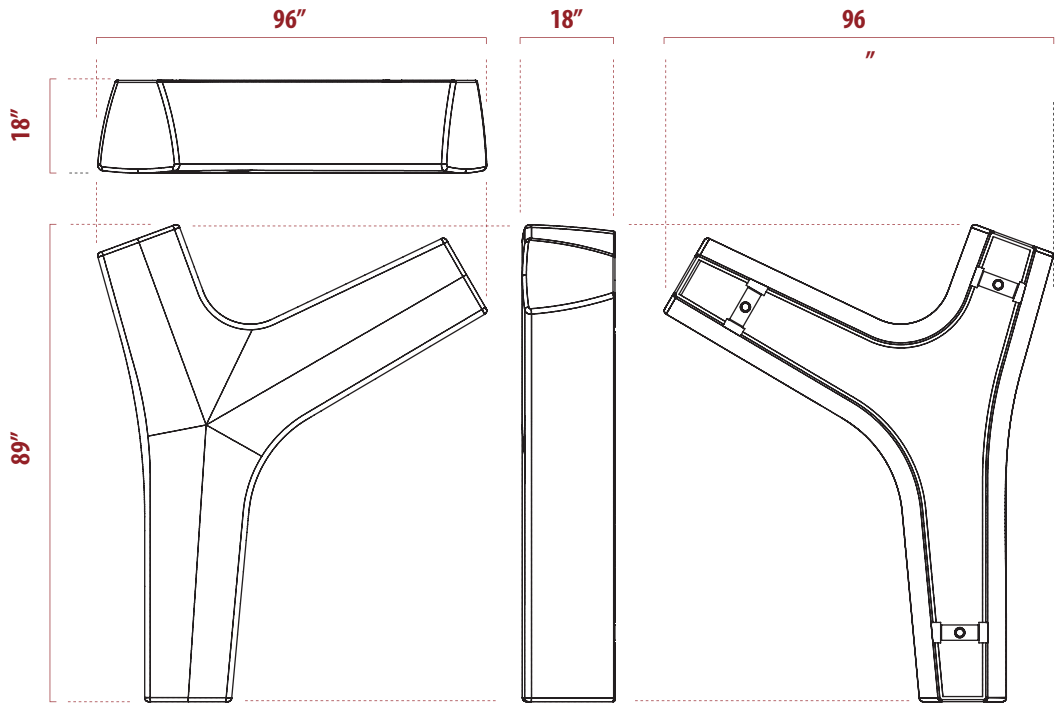

For more information about the TWIG Bench, visit http://tournesolsiteworks.com/product-TWIG Bench.html.

Tournesol SITEWORKS
tournesolsiteworks.com
800.542.2282

G314
©2014,
Tournesol Siteworks

FORTUNATO

Product Data Sheet

Ergonomic in its contours, Fortunato is a comfort-able urban seat. This sculptural and whimsical "rock bench" with its softened rotund geometry comes in two sizes, a long rectangle and a smaller bench, which can be paired with long or short "rock backrests.

Bench

- Fortunato is a Cast Stone bench that comes in two sizes, a long rectangle and a smaller bench, which can be paired with long or short backrests.
- The backrests are made of Reinforced Cast Stone.
- Seat and back elements are freestanding, and the optional backrests are bolted into nut inserts cast into seats.
- Fortunato has a soft acid-treated and waterproofed finish, and is available in Grey, Black, White and Beige.

Material

- Cast Stone is a proprietary mixture of cement, water and aggregate (stone) used for casting thick, heavy pieces.
- Cast stone has the strength to support massive geometries.
- Reinforced Cast Stone is cast stone that is poured and cast over an iron re-bar cage built to fit within the walls of the mold.
- Reinforced Cast Stone makes it possible to cast thinner, irregularly shaped forms while retaining appropriate strength.
- The colors of Escofet cast stone products are neutral, muted and earth-toned and are derived from the aggregates used in casting.
- No color is added in manufacture and no color is applied to finished products.
- The color range of every Escofet cast stone product is pre-determined by the formulation used in its manufacture.
- Cast stone products do not require any specific maintenance during their estimated lifespan of more than 30 years.
- Water absorption and freeze-thaw cycles can cause weathering, a reproduction of the process that takes place in natural rock.
- Escofet applies a waterproof finish to its products to protect against this process.
- Escofet cast stone products are large and heavy.
- Shipping, receiving, staging and installing these pieces is more akin to handling large statuary or pre-fabricated architectural elements.
- See installation guide for important information.

	STYLE	DEPTH	LEGHTH	HEIGHT	PRODUCT WEIGHT
	30" Bench	27"	30"	19"	1,124 lb
	Backrests for 30" Bench	15"	26"	30"	739 lb
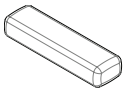	95" Bench	27"	95"	19"	3,616 lb
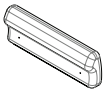	Backrests for 95" Bench	15"	87"	30"	2,502 lb

Landscape Forms, Inc. | 800.521.2546 | F 269.381.3455 | 7800 E. Michigan Ave., Kalamazoo, MI 49048

landscapeforms®

FORTUNATO

Product Data Sheet

Product Warranty

- ESCOFET warrants the durability of its product to Landscape Forms for a period of three (3) years from the date of invoice.
- The warranty covers the repair or replacement of the product or components at no charge.
- Notwithstanding, this warranty does not cover damages to ESCOFET products resulting from unloading; handling; installation; abuse; exposure to paint, liquids or corrosives; or any other damage not attributable to ESCOFET.
- The warranty shall also be void if ESCOFET products are tampered with, handled, removed or modified by persons not authorized by ESCOFET; or if the product has not been properly maintained by the customer.

To Specify

- To order, specify Fortunato bench, length, and with or without backrests.
- Select number of units, and standard color.
- Fortunato is freestanding.
- See materails/color sheet for standard color options.

Designed by Diego Fortunato

Visit our landscapeforms.com for more information. Specifications are subject to change without notice.
Landscape Forms supports the Landscape Architecture Foundation at the Second Century level.
©2016 Landscape Forms, Inc. Printed in U.S.A.

Landscape Forms, Inc. | 800.521.2546 | F 269.381.3455 | 7800 E. Michigan Ave., Kalamazoo, MI 49048

landscapeforms®

TWIG

Product Data Sheet

TWIG is a system of modular cast stone benches that grows organically like tree branches. It has no conventional back or front, allowing 360° use. The basic TWIG module has three asymmetric arms with edges that share a common geometry, so modules can be added and "branched" in virtually limitless patterns. Based on close observation of how people interact in outdoor spaces, it is designed to encourage a range of social activity, from two people in conversation to the gathering of larger groups. Configurations can meander around tree trunks under canopy shade and can be used to create garden edging and low walls. TWIG is heavy weight, so it can be installed without anchorage, and its subtly rounded edges and gently acid-etched surfaces invite passers-by to take a seat.

Bench

- TWIG is a backless bench made of reinforced cast stone.
- Its weight allows freestanding installation. TWIG is offered in acid-etched/ waterproofed finish, and comes in Grey, Black, White, and Beige.

	DEPTH	LEGHTH	HEIGHT	PRODUCT WEIGHT
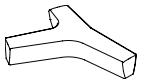	76"	93"	18"	3,850 lb

Material

- Reinforced Cast Stone is cast stone that is poured and cast over a stainless steel bar cage built to fit within the walls of the mold.
- Reinforced Cast Stone makes it possible to cast thinner, irregularly shaped forms while retaining appropriate strength.
- The colors of Escofet cast stone products are neutral, muted and earth-toned and are derived from the aggregates used in casting.
- No color is added in manufacture and no color is applied to finished products.
- The color range of every Escofet cast stone product is predetermined by the formulation used in its manufacture.
- Cast stone products do not require any specific maintenance during their estimated lifespan of more than 30 years. Water absorption and freeze-thaw cycles can cause weathering, a reproduction of the process that takes place in natural rock.
- Escofet applies a waterproof finish to its products to protect against this process.
- Escofet cast stone products are large and heavy.
- Shipping, receiving,staging and installing these pieces is more akin to handling large statuary or pre-fabricated architectural elements.
- See installation guide for important information.

Product Warranty

- ESCOFET warrants the durability of its product to Landscape Forms for a period of three (3) years from the date of invoice.
- The warranty covers the repair or replacement of the product or components at no charge.
- Notwithstanding, this warranty does not cover damages to ESCOFET prod-

Landscape Forms, Inc. | 800.521.2546 | F 269.381.3455 | 7800 E. Michigan Ave., Kalamazoo, MI 49048

TWIG

Product Data Sheet

ucts resulting from unloading; handling; installation; abuse; exposure to paint, liquids or corrosives; or any other damage not attributable to ESCOFET.

- The warranty shall also be void if ESCOFET products are tampered with, handled, removed or modified by persons not authorized by ESCOFET; or if the product has not been properly maintained by the customer.

To Specify

- To order, Specify TWIG and standard color.
- Benches are freestanding.
- See materials/color sheet for standard color options.

Designed by Alexander Lotersztain

Visit our landscapeforms.com for more information. Specifications are subject to change without notice.
Landscape Forms supports the Landscape Architecture Foundation at the Second Century level.
©2016 Landscape Forms, Inc. Printed in U.S.A.

Landscape Forms, Inc. | 800.521.2546 | F 269.381.3455 | 7800 E. Michigan Ave., Kalamazoo, MI 49048

Appendix 06

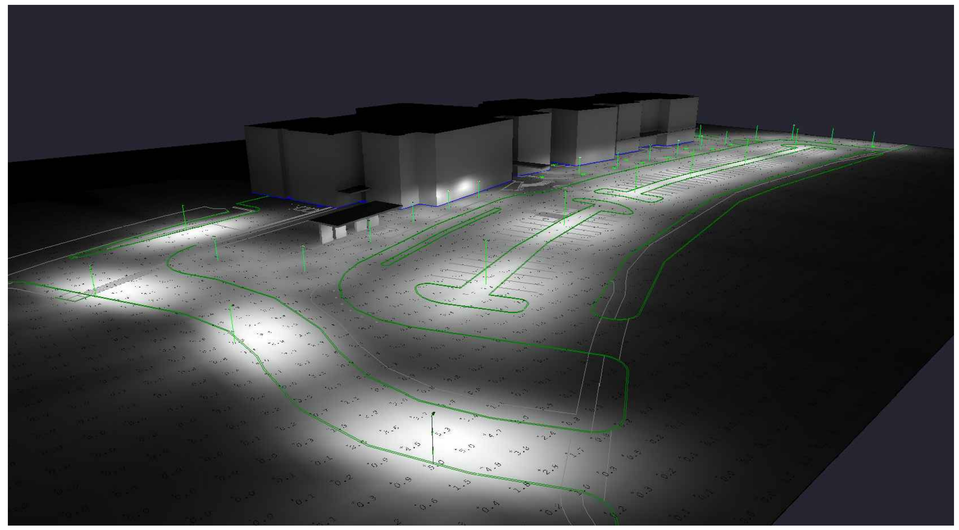

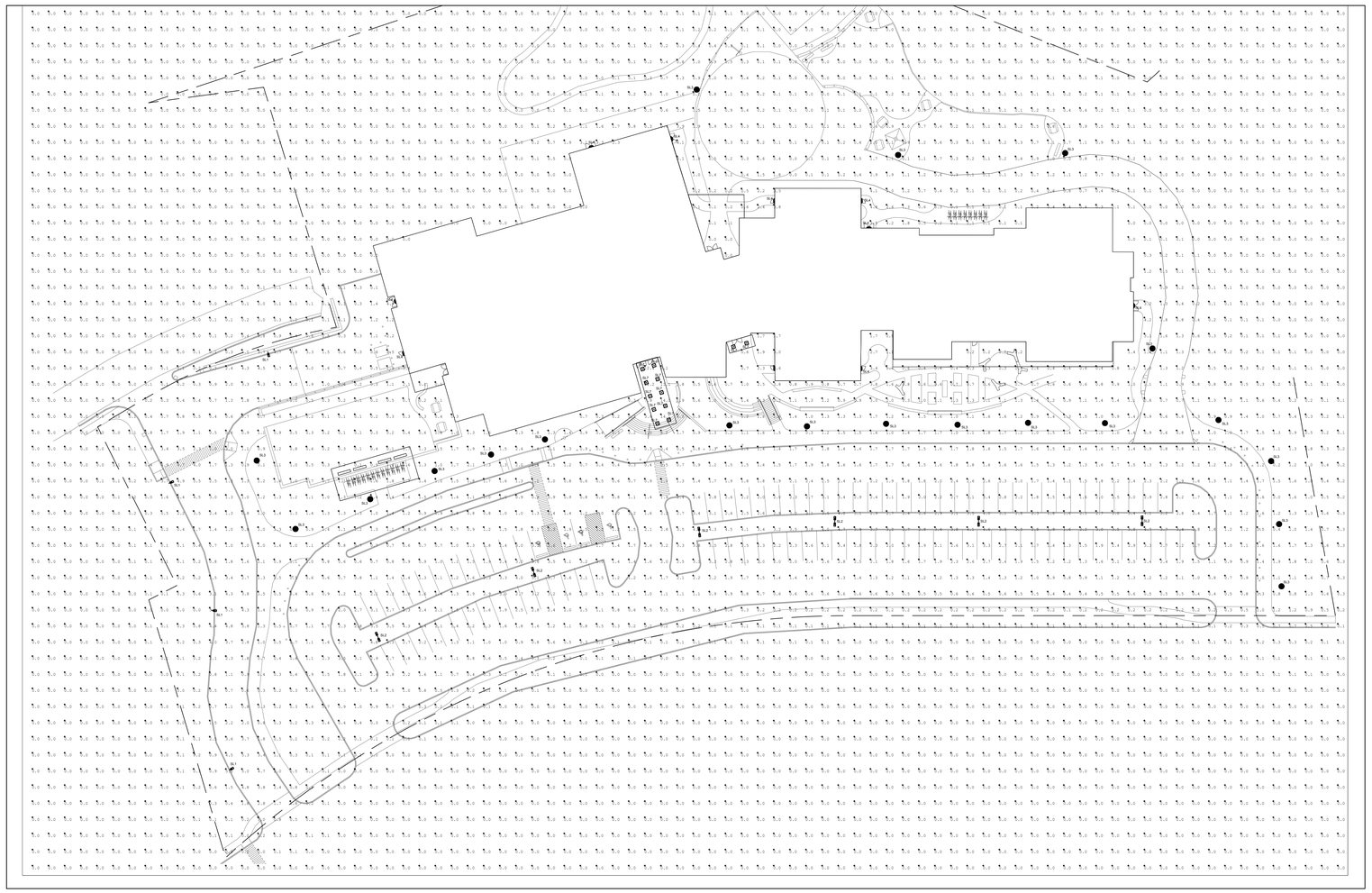

1 LC1.0 ELECTRICAL SITE PLAN LIGHTING CALCULATION
SCALE: 1" = 30' - 0"

2 LC1.0 SITE PARKING LOT POLE FIXTURES
SCALE: N.T.S.

3 LC1.0 SITE PEDESTRIAN POLE FIXTURE
SCALE: N.T.S.

4 LC1.0 SITE WALL PACK FIXTURES
SCALE: N.T.S.

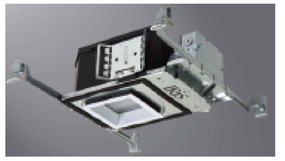

5 LC1.0 SITE CANOPY FIXTURES
SCALE: N.T.S.

GARCIA GALUSKA DESOUSA
CONSULTING ENGINEERS
3131 Fairview Corner Road, Dartmouth, MA 02747 - 1271
508 - 998 - 3700 FAX 508 - 998 - 0983 E - MAIL info@g-g-d.com

Project No. 15-704

HILLSIDE SCHOOL AT CENTRAL AVE
585 CENTRAL AVENUE
NEEDHAM, MA 02494

COPYRIGHT © 2015 by Dave & Whitter Architects Inc. (D&W). These documents are D&W's instruments of service and as such D&W retains all copyrights, common law and statutory rights. Use of these documents without D&W's express, written permission will result in copyright infringement.

DESIGN DEVELOPMENT

REVISION:	Date:

DATE:	SCALE:
03/01/2017	N.T.S.

SHEET TITLE:
LIGHTING CALCULATIONS

SHEET #:
LC1.0

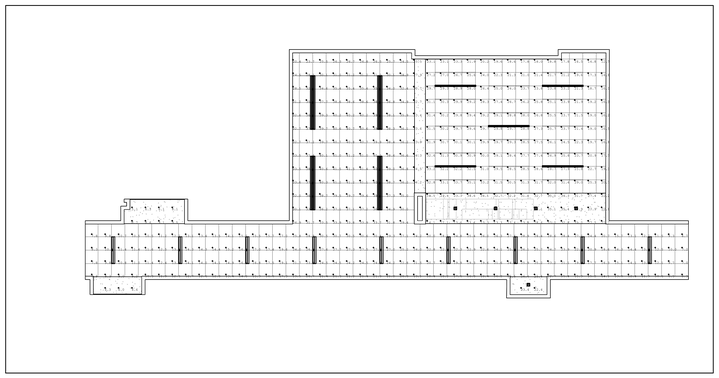

1 LC2.0 ELECTRICAL CORRIDOR & EXTENDED LEARNING LIGHTING CALCULATION
SCALE: 1/8" = 1'-0"

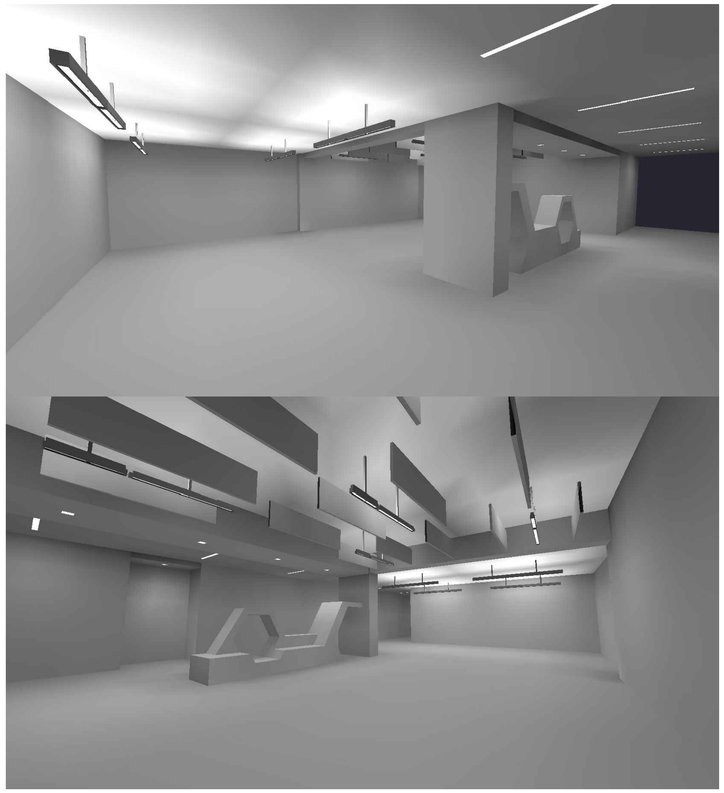

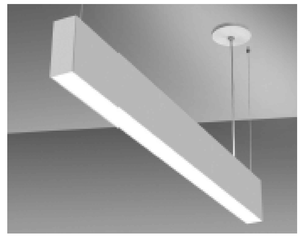

3 LC2.0 EXTENDED LEARNING PENDANT 1
SCALE: N.T.S.

4 LC2.0 EXTENDED LEARNING PENDANT 2
SCALE: N.T.S.

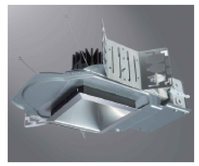

5 LC2.0 EXTENDED LEARNING DOWNLIGHT
SCALE: N.T.S.

6 LC2.0 CORRIDOR RECESSED FIXTURE
SCALE: N.T.S.

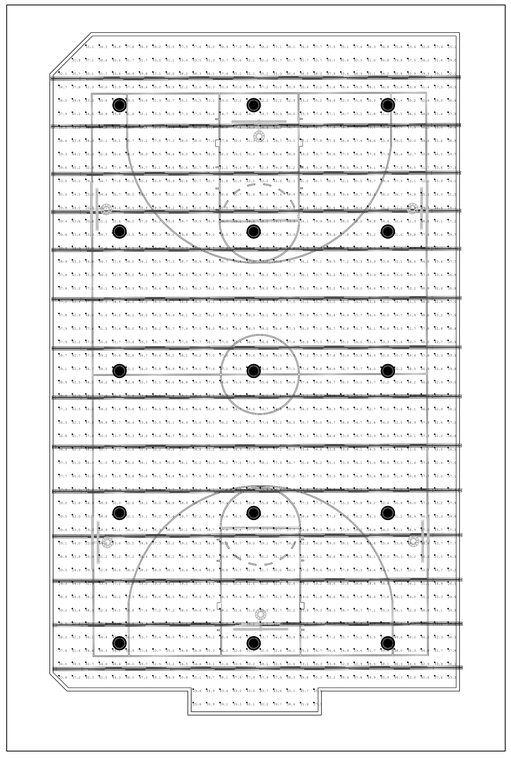

2 LC2.0 ELECTRICAL GYMNASIUM LIGHTING CALCULATION
SCALE: 1/8" = 1'-0"

7 LC2.0 GYM FIXTURE
SCALE: N.T.S.

GARCIA GALUSKA DESOUSA
CONSULTING ENGINEERS INC.
ENTIRE FACILITY
508 998 3700 FAX 508 998 0883 E-MAIL info@g-g-d.com

© Dimensions, concepts and copyright of this drawing and all its elements are the property of GGD

Project No.
15-704

HILLSIDE SCHOOL AT CENTRAL AVE
585 CENTRAL AVENUE
NEEDHAM, MA 02494

COPYRIGHT © 2015 by Dore & Whitier Architects Inc. (D&W)
These documents are D&W's instruments of service and as such D&W retains all copyrights, common law and statutory rights including the copyright thereto. Unauthorized use, copying, without permission will result in copyright infringement.

DESIGN DEVELOPMENT

REVISION:	Date:

DATE: 03/01/2017
SCALE: N.T.S.

SHEET TITLE:
LIGHTING CALCULATIONS

SHEET #:
LC2.0

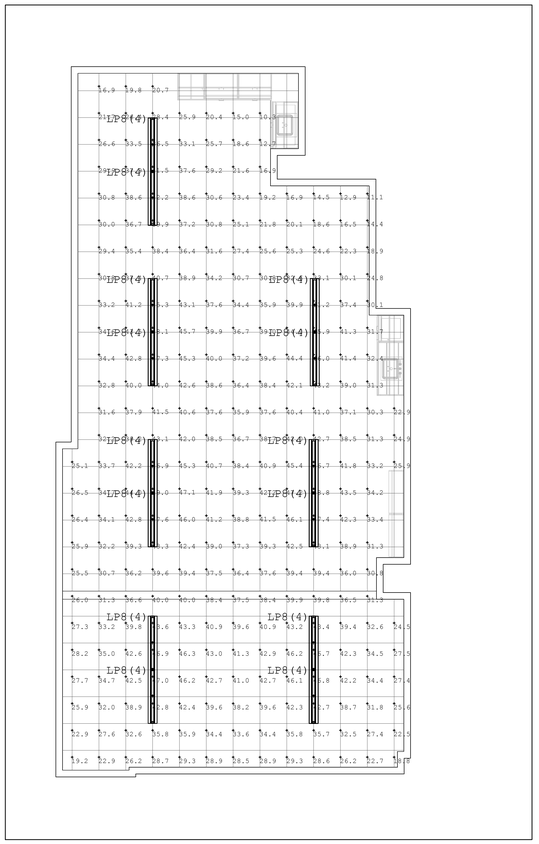

1 LC3.0 ELECTRICAL CLASSROOM LIGHTING CALCULATION
SCALE: 1/4" = 1'-0"

3 LC3.0 CLASSROOM PENDANT
SCALE: N.T.S.

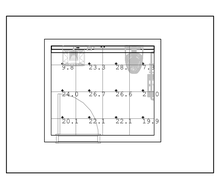

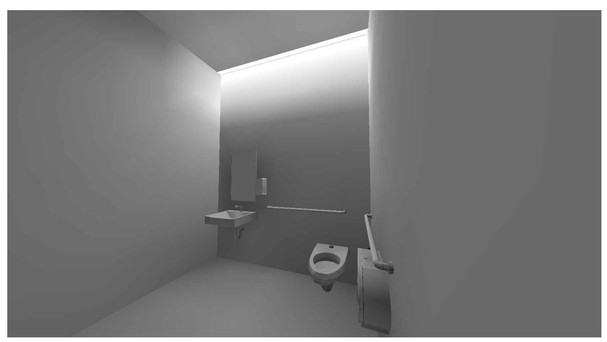

2 LC3.0 ELECTRICAL TOILET ROOM LIGHTING CALCULATION
SCALE: 1/4" = 1'-0"

4 LC3.0 BATHROOM WALL SLOT FIXTURE
SCALE: N.T.S.

GARCIA GALUSKA DESOUSA
CONSULTING ENGINEERS
2171 Avenue of the Arts, Roxbury, MA 02474
508-996-3700 FAX 508-996-0983 E-MAIL info@gg-d.com

Project No. 15-704

HILLSIDE SCHOOL AT CENTRAL AVE
585 CENTRAL AVENUE
NEEDHAM, MA 02494

COPYRIGHT © 2015 by Dore & Whitten Architects Inc. (DAW) These documents are DAW's instruments of service and as such DAW retains all copyrights, common law and statutory rights. Use of these documents without DAW's express, written permission will result in copyright infringement.

DESIGN DEVELOPMENT

REVISION:	Date:

DATE:	SCALE:
03/01/2017	N.T.S.

SHEET TITLE:
LIGHTING CALCULATIONS

SHEET #:
LC3.0

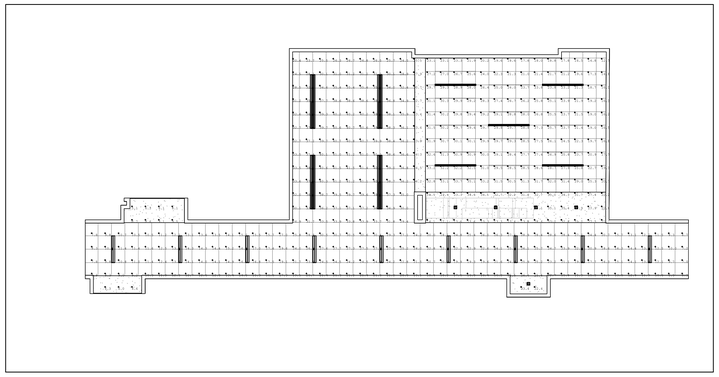

1 LC2.0 ELECTRICAL CORRIDOR & EXTENDED LEARNING LIGHTING CALCULATION
SCALE: 1/8" = 1'-0"

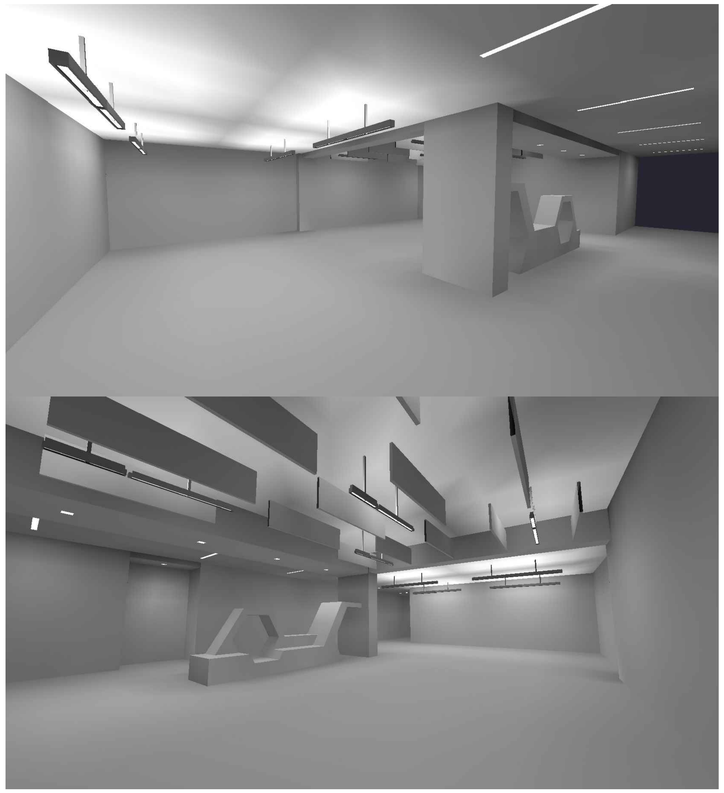

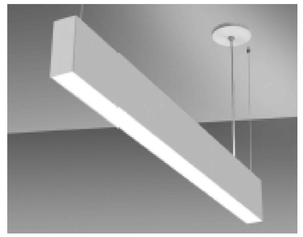

3 LC2.0 CAFETERIA PENDANT 1
SCALE: N.T.S.

4 LC2.0 CAFETERIA PENDANT 2
SCALE: N.T.S.

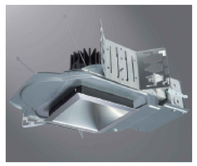

5 LC2.0 CAFETERIA DOWNLIGHT
SCALE: N.T.S.

6 LC2.0 CAFETERIA RECESSED FIXTURE
SCALE: N.T.S.

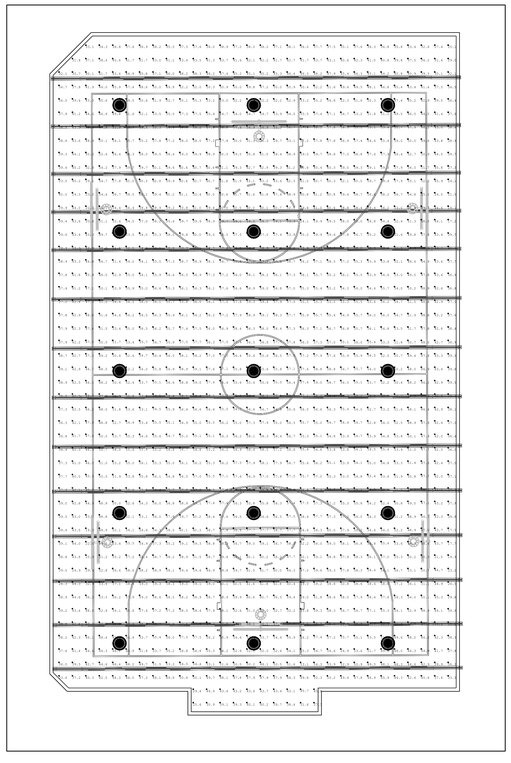

2 LC2.0 ELECTRICAL GYMNASIUM LIGHTING CALCULATION
SCALE: 1/8" = 1'-0"

7 LC2.0 GYM FIXTURE
SCALE: N.T.S.

GARCIA GALUSKA DESOUSA CONSULTING ENGINEERS INC.
ESTABLISHED 1977
508 986 3700 FAX 508 986 0883 E-MAIL info@g-g-d.com
Northborough, MA 01532
300 Friberg Parkway, Suite 2000
T 978 499 2944
Burlington, VT 05401
Boston, Massachusetts
T 802 863 1435
F 802 863 1450
www.dwwarchitects.com
DWW ARCHITECTS • PROJECT MANAGERS
DORE & WHITTIER ARCHITECTS, INC.

Project No. 15-704

HILLSIDE SCHOOL AT CENTRAL AVE
585 CENTRAL AVENUE
NEEDHAM, MA 02494

COPYRIGHT © 2015 by Dore & Whittier Architects Inc. (D&W) These documents are D&W's instruments of service and as such D&W retains all copyrights, common law and statutory rights. Use of these documents without D&W's express, written permission will result in copyright infringement.

DESIGN DEVELOPMENT

REVISION:	Date:

DATE: 03/01/2017 SCALE: N.T.S.

SHEET TITLE: LIGHTING CALCULATIONS

SHEET #: LC2.0

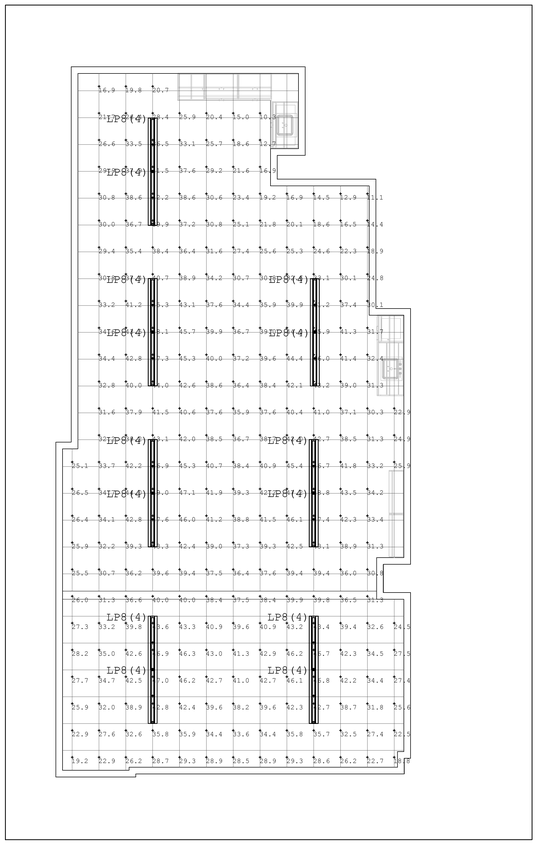

1 LC3.0 ELECTRICAL CLASSROOM LIGHTING CALCULATION
SCALE: 1/4" = 1'-0"

3 LC3.0 CLASSROOM PENDANT
SCALE: N.T.S.

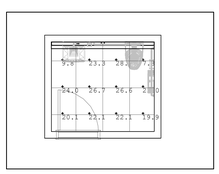

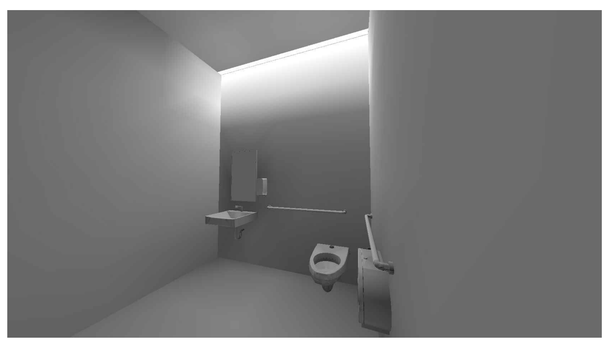

2 LC3.0 ELECTRICAL TOILET ROOM LIGHTING CALCULATION
SCALE: 1/4" = 1'-0"

4 LC3.0 BATHROOM WALL SLOT FIXTURE
SCALE: N.T.S.

GARCIA GALUSKA DESOUSA CONSULTING ENGINEERS INC.
375 Totten Pond Road, Waltham, MA 02451
508 966 3700 FAX 508 966 0983 E-MAIL info@g-g-d.com
Civil • Structural • MEP/FP

DORE & WHITTIER ARCHITECTS, INC.
ARCHITECTS • PROJECT MANAGERS
Northampton, MA 01060
30 Main Street, Suite 303
T: 978 499 2944
Burlington, VT 05401
Bristol, VT 05443
T: 802 863 1455
F: 802 863 1454
www.doreandwhittier.com

Project No. 15-704

HILLSIDE SCHOOL AT CENTRAL AVE
585 CENTRAL AVENUE
NEEDHAM, MA 02494

COPYRIGHT © 2015 by Dore & Whittier Architects Inc. (D&W) These documents are D&W's instruments of service and as such D&W retains all copyrights, common law and statutory rights including the reproduction rights. Copies, express permission will result in copyright infringement.

DESIGN DEVELOPMENT

REVISION:	Date:

DATE: 03/01/2017 SCALE: N.T.S.

SHEET TITLE: LIGHTING CALCULATIONS

SHEET #: LC3.0